Technical sheet :

VARIOWINCH

Technical characteristics

- Hydraulic motor + end of cable automatic movement stop.
- Oil immersed negative break.
- Patented variable speed concept.
- Autonomous, 100% hydraulic speed adaptation to load.
- Homologated swivel self locking hook.
- Winch storage stand with sleeves for yard handling.
- Note: dimensions below are given for winch placed on its stands ; working weight: 700 kg / 1544 lb.
- MRT Vision+ : significant hook speed increase through machine/attachment cooperation improvement.
- Limited capacity for MRT 3050.

  [The 3D picture at the top of this page is the reference VARIOWINCH 7.2 t - 52576737].

Customer benefits

- Turns your telehandler into a crane.
- 4x faster than a standard Manitou 5 t / 11025 lb winch / 3x faster than a 3 t / 6615 lb one.
- Speed is continuously adapted to the load & operator's speed requirement.
- Max. speed 60 m/min / 197 ft/min (MRT 3255, no load, lifting).
- Easy steering from the cab or with the machine's remote control (optional).

Technical characteristics		W 7200 V
Working height (mm)	h21	36000
Capacities		
Capacity (kg)		7200
Weight		
Overall weight (kg)		700
Dimensions		
Maximum outreach (mm)		238
Weight and dimensions		
Overall height (mm)	h17	2408
Overall length (mm)	l1	1200
Cable loop		1 loop
Width (mm)		1223
Depth (mm)	p5	638
Cable length (mm)		76000
Working Parameters		
Required machine equipment		
Hook Speed (m/mn)		60.60

Machines compatibility	W 7200 V
Reference number E-RECO	52735674
MRT 2260	X
MRT 2260 e	X
MRT 2570	X
MRT 2660	X
MRT 2660 e	X
MRT 3060	X
MRT 3570	X
MRT 3570 ES	X
MRT-X 2260	X
MRT-X 2570	X
MRT-X 2660	X
MRT-X 3060	X
MRT-X 3570	X
MRT-X 3570 ES	X

TABLE SYMBOL					
	No predisposition required		Hydraulic line		Return piping to hydraulic oil tank
	Electric predisposition		Platform predisposition		Tyre handler, cylinder handler predisposition

Variowinch - Dimensional drawing

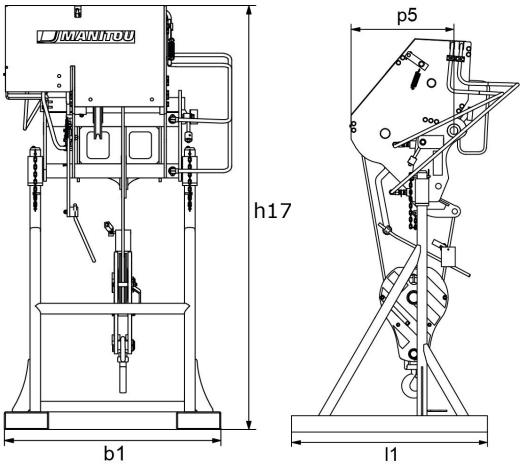

MANITOU
HANDLING YOUR WORLD

Head Office
B.P. 249 - 430 rue de l'Aubinière
44150 Ancenis Cedex - France
Tel: +33 (0)2 40 09 10 11 - Fax: +33 (0)2 40 09 10 97
www.manitou.com

This publication provides a description of the configuration versions and options for Manitou products, which may differ for equipment. The equipment presented in this brochure may be part of a series, as an option, or it may not be available, depending on the versions. Manitou reserves the right, at any time and without notice, to amend the specifications described and represented. The specifications provided do not bind the manufacturer. For more details, please contact your Manitou agent. This is not a contractually binding document. The presentation of the products is not contractually binding. List of specifications non-exhaustive. The logos as well as the visual identity of the company are owned by Manitou and cannot be used without authorisation. All rights reserved. The photos and diagrams contained in this brochure are only provided for consultation and information purposes.
MANITOU BF SA - Limited company with board of directors - Share capital: 39,668,399 euros - 857 802 508 RCS Nantes