Technical sheet :

TMT 25S 4W Y ST5

MANITOU
HANDLING YOUR WORLD

	Technical characteristics		Metric
1.1	Manufacturer		MANITOU
1.2	Model Name		TMT 25S 4W Y ST5
1.2.1	Reach out equipment		Telescopic boom
1.3	Power source		Diesel
1.4	Operator type		Seated
1.5	Max. capacity	Q	2500 kg
1.6	Load center of gravity	c	500 mm
1.8	Load distance, centre of drive axle to fork	x	-505 mm
1.9	Wheelbase	y	1651 mm
	Weight		
2.1	Service weight		2765 kg
	Wheels		
3.1	Tires type		Pneumatic
3.2	Dimensions of front wheels		10x16,5
3.3	Dimensions of rear wheels		10x16,5
3.5	Number of front wheels / rear wheels		2 / 1
3.5.2	Drive wheels (front / rear)		2 / 1
3.6	Front wheel gauge	b10	2172 mm
	Dimensions		
4.1	Mast/fork carriage tilt, forward	α	100 °
4.1.1	Mast/fork carriage tilt, backward	β	12 °
4.2	Height telescopic boom lowered	h1	2240 mm
4.3	Mast free lift	h2	1440 mm
4.4	Max. lifting height	h3	3380 mm
4.5	Height telescopic boom extended	h4	3925 mm
4.7	Height of overhead guard (cabin)	h6	2200 mm
4.8	Seat height/stand height	h7	1220 mm
4.19	Overall length	l1	2790 mm
4.20	Length to face of forks	l2	1590 mm
4.21	Overall width	b1	2450 mm
4.22	Forks section / width / length	s / e / l	40 mm x 125 mm x 1200 mm
4.23	Fork carriage ISO 2328 (class/form) A/B		FEM 2A
4.24	Fork carriage width	b3	1270 mm
4.26	Distance between support arms	b5	1267 mm
4.26	Distance between wheel arms/loading surfaces	b4	1519 mm
4.28	Maximum horizontal extension at COG 600	l4	1310 mm
4.32	Ground clearance at centre of wheelbase	m2	290 mm
4.33	Aisle Width for pallets 1000 x 1200 crossways	Ast	3970 mm
4.34	Aisle width for 800 x 1200 pallet lengthways	Ast	3970 mm
4.35	Turning radius	Wa	3072 mm
	Performances		
5.2	Lifting speed (laden / unladen)		0.25 m/s / 0.27 m/s
5.3	Lowering speed (laden / unladen)		0.29 m/s / 0.32 m/s
5.10	Service brake		Hydraulic brakes by loss of pressure
	Engine		
7.1	Engine brand / norm / model		Yanmar - Stage V / 3TNV 86 CT
7.2	Engine power (Hp / kW)		42 Hp / 31 kW
7.3	Rated speed		2800 rpm
7.4	Number of cylinders / Capacity of cylinders		3 - 1568 cm³
	Miscellaneous		
8.1	Type of drive control		Mechanical
8.2	Working hydraulic pressure for attachments		270 bar
8.3	Oil flow rate for attachments		44 l/min
8.4	Measured/guaranteed mean noise level at the ear of the operator		104 dB

TMT 25S 4W Y ST5 - Dimensional drawing

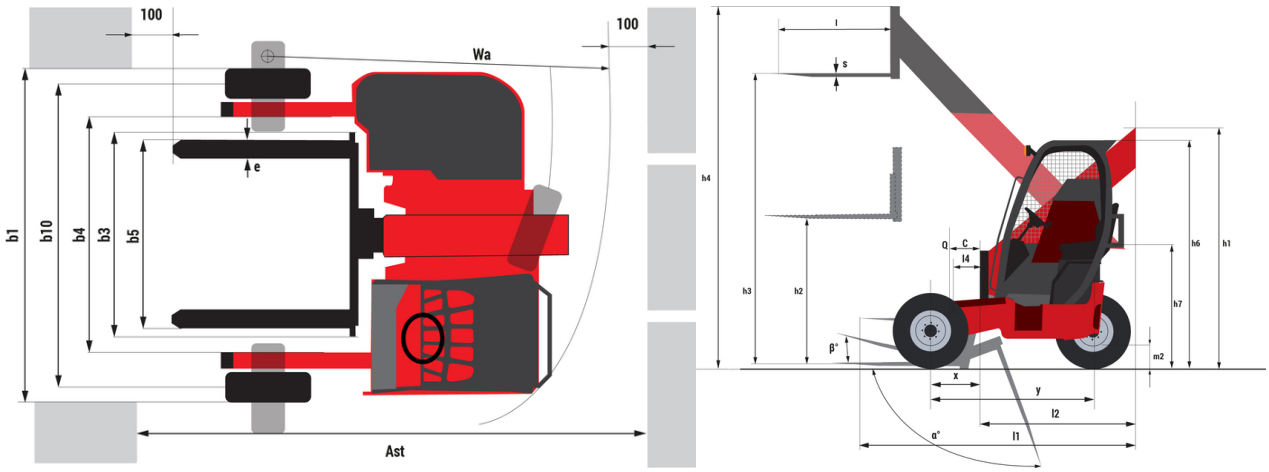

TMT 25S 4W Y ST5 - Load chart

Machine on tires with forks Metric

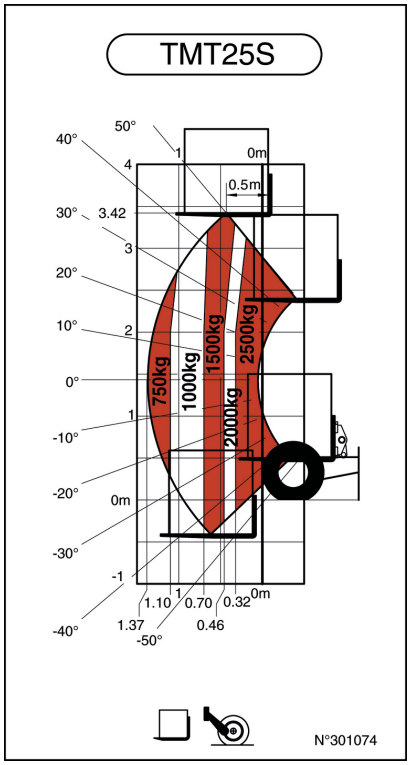

Machine on lowered stabilisers with forks Metric

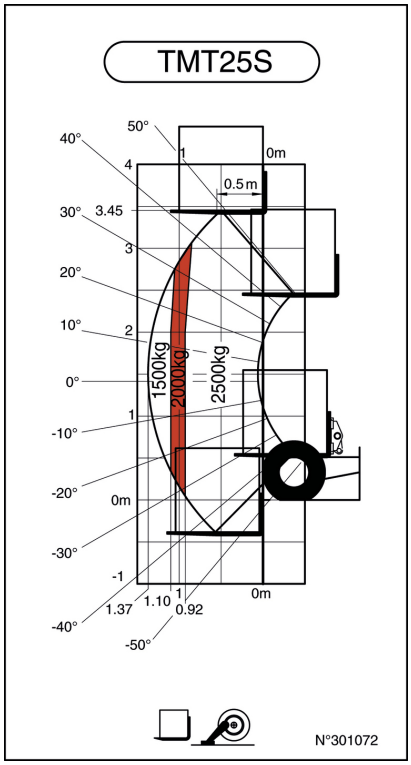

Head Office
B.P. 249 - 430 rue de l'Aubinière
44150 Ancenis Cedex - France
Tel: +33 (0)2 40 09 10 11 - Fax: +33 (0)2 40 09 10 97
www.manitou.com

This publication provides a description of the configuration versions and options for Manitou products, which may differ for equipment. The equipment presented in this brochure may be part of a series, as an option, or it may not be available, depending on the versions. Manitou reserves the right, at any time and without notice, to amend the specifications described and represented. The specifications provided do not bind the manufacturer. For more details, please contact your Manitou agent. This is not a contractually binding document. The presentation of the products is not contractually binding. List of specifications non-exhaustive. The logos as well as the visual identity of the company are owned by Manitou and cannot be used without authorisation. All rights reserved. The photos and diagrams contained in this brochure are only provided for consultation and information purposes.
MANITOU BF SA - Limited company with board of directors - Share capital: 39,668,399 euros - 857 802 508 RCS Nantes