Technical sheet :

# TMM 25 ST5

MANITOU
HANDLING YOUR WORLD

| | Technical characteristics | | Metric |
|---|---|---|---|
| 1.1 | Manufacturer | | MANITOU |
| 1.2 | Model Name | | TMM 25 ST5 |
| 1.2.1 | Reach out equipment | | Pantograph |
| 1.3 | Power source | | Diesel |
| 1.4 | Operator type | | Seated |
| 1.5 | Max. capacity | Q | 2500 kg |
| 1.6 | Load center of gravity | c | 500 mm |
| 1.8 | Load distance, centre of drive axle to fork | x | 490 mm |
| 1.9 | Wheelbase | y | 1598 mm |
| | **Weight** | | |
| | Standard mast reference of the machine | | FVD 30 |
| 2.1 | Service weight | | 2340 kg |
| 2.2 | Weight on front axle (laden) / rear axle (laden) | | 3585 kg / 1255 kg |
| 2.3 | Weight on front axle (Unladen) / rear axle (Unladen) | | 1085 kg / 1255 kg |
| | **Wheels** | | |
| 3.1 | Tires type | | Pneumatic |
| 3.2 | Dimensions of front wheels | | 27X10-12 IC30 |
| 3.3 | Dimensions of rear wheels | | 27X10-12 IC30 |
| 3.5 | Number of front wheels / rear wheels | | 2 / 1 |
| 3.5.2 | Drive wheels (front / rear) | | 2 / 1 |
| 3.6 | Front wheel gauge | b10 | 2151 mm |
| | **Dimensions** | | |
| 4.4 | Max. lifting height | h3 | 4200 mm |
| 4.7 | Height of overhead guard (cabin) | h6 | 2120 mm |
| 4.8 | Seat height/stand height | h7 | 1070 mm |
| 4.19 | Overall length | l1 | 2650 mm |
| 4.21 | Overall width | b1 | 2406 mm |
| 4.22 | Forks section / width / length | s / e / l | 40 mm x 122 mm x 1200 mm |
| 4.23 | Fork carriage ISO 2328 (class/form) A/B | | 2A |
| 4.24 | Fork carriage width | b3 | 1260 mm |
| 4.26 | Distance between support arms | b5 | 1165 mm |
| 4.26 | Distance between wheel arms/loading surfaces | b4 | 1600 mm |
| 4.28 | Maximum horizontal extension at COG 600 | l4 | 1000 mm |
| 4.34 | Aisle width for 800 x 1200 pallet lengthways | Ast | 3363 mm |
| 4.35 | Turning radius | Wa | 2463 mm |
| | **Performances** | | |
| 5.1 | Travel speed (laden / unladen) | | 10.60 km/h - 10.70 km/h |
| 5.2 | Lifting speed (laden / unladen) | | 0.26 m/s / 0.24 m/s |
| 5.3 | Lowering speed (laden / unladen) | | 0.38 m/s / 0.21 m/s |
| 5.7 | Gradeability (laden / unladen) | | 50 % / 51 % |
| 5.9 | Acceleration time (laden / unladen) | | 4.10 s / 2.60 s |
| 5.10 | Service brake | | Hydraulic brakes by loss of pressure |
| | Transmission type | | Hydrostatic |
| | **Engine** | | |
| 7.1 | Engine brand / norm / model | | Kubota - Stage V / D1105-E4B-MNT-2 |
| 7.2 | Engine power (Hp / kW) | | 25 Hp / 18.50 kW |
| 7.3 | Rated speed | | 3000 rpm |
| 7.4 | Number of cylinders / Capacity of cylinders | | 3 - 1123 cm³ |
| | **Miscellaneous** | | |
| 8.1 | Type of drive control | | Cable |
| 8.2 | Working hydraulic pressure for attachments | | 190 bar |
| 8.3 | Oil flow rate for attachments | | 43 l/min |
| 8.4 | Sound level at the driver's ear according to DIN 12 053 | | 84 dB |

## TMM 25 ST5 - Dimensional drawing

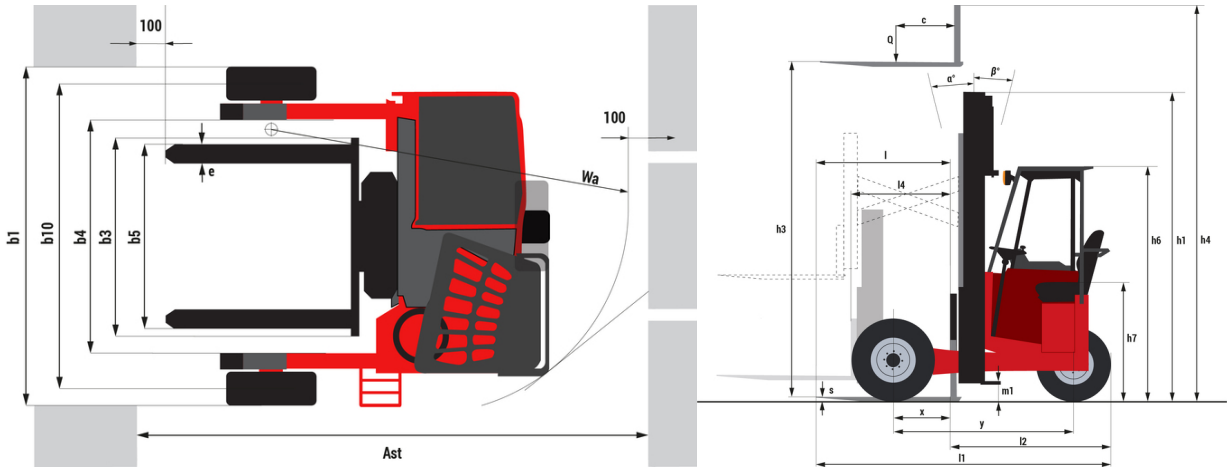

# Characteristics of masts and residual capacities

| | | Full Visibility Duplex (FVD) | | FVD 30 | FVD 36 | FVD 42 |
|---|---|---|---|---|---|---|
| | | h1 - Mast lowered height | mm | 2392 | 2742 | 3090 |
| | | h3 - Mast lifting height | mm | 3000 | 3600 | 4200 |
| | | h4 - Mast extended height | mm | 4495 | 5095 | 5695 |
| Residual Capacity (Maximum Height & LC = 600 mm) | Simple Reach | Pantograph reach in | kg | 2500 | 2500 | 2500 |
| | | Pantograph reach out with stabilizers | kg | 2000 | 1950 | |
| | | Pantograph reach out without stabilizers | kg | 1050 | 1000 | |
| | | Telescopic forks reach in | kg | 2500 | 2500 | |
| | | Telescopic Forks reach out with stabilizers | kg | 1350 | 1300 | |
| | | Telescopic Forks reach out without stabilizers | kg | 1150 | 1100 | |
| | Double Reach | Pantograph & TF reach in | kg | 2500 | 2500 | |
| | | Pantograph & TF reach out with stabilizers | kg | 1100 | 1100 | |
| | | Pantograph & TF reach out without stabilizers | kg | 550 | 550 | |

**Head Office**
B.P. 249 - 430 rue de l'Aubinière
44150 Ancenis Cedex - France
Tel: +33 (0)2 40 09 10 11 - Fax: +33 (0)2 40 09 10 97
www.manitou.com

This publication provides a description of the configuration versions and options for Manitou products, which may differ for equipment. The equipment presented in this brochure may be part of a series, as an option, or it may not be available, depending on the versions. Manitou reserves the right, at any time and without notice, to amend the specifications described and represented. The specifications provided do not bind the manufacturer. For more details, please contact your Manitou agent. This is not a contractually binding document. The presentation of the products is not contractually binding. List of specifications non-exhaustive. The logos as well as the visual identity of the company are owned by Manitou and cannot be used without authorisation. All rights reserved. The photos and diagrams contained in this brochure are only provided for consultation and information purposes.
MANITOU BF SA - Limited company with board of directors - Share capital: 39,668,399 euros - 857 802 508 RCS Nantes