Technical sheet :

MANURE FORK WITH GRAPPLE

Technical characteristics

- Massive structure and reinforced grapple for more longevity.
- Open structure.
- Very good manure holding by the grab.
- Adjustable grapple opening- more working accuracy.
- Forged tines & teeth- easy to dismantle.
- Well protected hydraulic components.

[The 3D picture at the top of this page is the reference FFGR 1500 / 600 - 52737500].

Customer benefits

- Rugged, multi-purpose attachment.
- Easy handling of compact manure.
- Total jaw opening allows working flush with walls.
- Versatile attachment that enables occasional square bale handling.
- Very good visibility, faster work.

Technical characteristics		FFGR 1500 / 600	FFGR 1500 / 900	FFGR 1700	FFGR 1950	FFGR 1950 DA	FFGR 2100	FFGR 2400
Distance to center of gravity (mm)		361	370	-	-	-	-	-
Capacities								
Capacity (kg)		720	1115	-	1580	1580	1700	1700
Heaped capacity (l)		600	930	1050	1000	1000	1100	1300
Weight								
Overall weight (kg)		340	437	505	477	530	492	528
Weight and dimensions								
Overall length (mm)	l1	1274	1321	1320	1322	1320	1322	1325
Forks length (mm)	l	810	810	810	810	810	810	810
Forks spread (mm)	b5	225	225	225	225	225	225	225
Width (mm)		1535	1627	1700	1950	1950	2100	2400
Closed grapple height (mm)	h33	879	1138	1124	1138	1124	1138	1138
Opened grapple height (mm)	h34	1675	1869	2093	1625	2093	1636	1615
Working Parameters								
Required machine equipment								
Teeth / Fingers		7 / 7	7 / 7	8 / 7	9 / 7	9 / 7	10 / 7	12 / 8

Machines compatibility	FFGR 1500 / 600	FFGR 1500 / 900	FFGR 1700	FFGR 1950	FFGR 1950 DA	FFGR 2100	FFGR 2400
Reference number	-	52595596	751429	751404	751428	751403	751405
All-Tach®	52737500	-	-	-	-	-	-
4 point Carriage	52742068	-	-	-	-	-	-
Euro Carriage	52742069	-	-	-	-	-	-
AL530	X	-	-	-	-	-	-
GCT 3-14	X	-	-	-	-	-	-
GCT 3-14 +	X	-	-	-	-	-	-
MLA 5-50 H	X	-	-	-	-	-	-
MLT 420-60 H	-	X	-	-	-	-	-
MLT 625-75 H	-	-	X	-	X	-	-
MLT 625 e	-	-	X	-	X	-	-
MLT 630-115 (S1)	-	-	-	X	-	X	X
MLT 630-115 (S2)	-	-	-	X	-	X	-
MLT 630-115 V (S1)	-	-	-	X	-	X	X
MLT 630-115 V (S2)	-	-	-	X	-	X	-
MLT 630-115 V CP (S1)	-	-	-	X	-	X	X
MLT 630-115 V CP (S2)	-	-	-	X	-	X	-
MLT 635-130 PS+ (S1)	-	-	-	-	-	X	X
MLT 635-130 PS+ (S2)	-	-	-	-	-	X	X
MLT 635-140 V+ (S1)	-	-	-	-	-	X	X
MLT 635-140 V+ (S2)	-	-	-	-	-	X	X
MLT 730-115 V (S1)	-	-	-	X	-	X	X
MLT 730-115 V (S2)	-	-	-	X	-	X	-
MLT 730-115 V CP (S1)	-	-	-	X	-	X	X
MLT 730-115 V CP (S2)	-	-	-	X	-	X	-
MLT 733-115	-	-	-	-	-	X	X
MLT 733-115 (S2)	-	-	-	-	-	X	X
MLT 733-115 LSU (S1)	-	-	-	-	-	X	X
MLT 737-130 PS+ (S1)	-	-	-	-	-	X	X
MLT 738-130 PS+ (S1)	-	-	-	-	-	X	X
MLT 741-130 PS+ (S1)	-	-	-	-	-	X	X
MLT 741-140 V+ (S1)	-	-	-	-	-	X	X
MLT 742-130 PS+ (S1)	-	-	-	-	-	X	X
MLT 742-140 V+ (S1)	-	-	-	-	-	X	X
MLT 841-145 PS+	-	-	-	-	-	-	X
MLT 850-145 V+	-	-	-	-	-	-	X
MLT 937-115 (S1)	-	-	-	-	-	X	X
MLT 940-140 V+ (S1)	-	-	-	-	-	X	X
MLT 940-140 V+ (S2)	-	-	-	-	-	X	X
MLT 1041-145 PS+L	-	-	-	-	-	-	X
MLT-X 625-75 H	-	-	X	-	X	-	-
MLT-X 732	-	-	-	-	-	X	X
MLT-X 735 T LSU	-	-	-	-	-	X	X
MLT-X 738-130 PS+ (S1)	-	-	-	-	-	X	X
MLT-X 741 T LSU	-	-	-	-	-	X	X
MLT-X 841 - 145 PS+	-	-	-	-	-	-	X
MLT-X 850-145 V+	-	-	-	-	-	-	X
MLT-X 1041-145 PS+L	-	-	-	-	-	-	X
ULM 412 H	X	-	-	-	-	-	-
ULM 412 H	X	-	-	-	-	-	-
ULM 415 H	X	-	-	-	-	-	-
ULM 415 H	X	-	-	-	-	-	-
MLT 630-105 ST4 OLD	-	-	-	X	-	X	-
MLT 630-105 V CP ST4 OLD	-	-	-	X	-	X	-
MLT 630-105 V ST4 OLD	-	-	-	X	-	X	-
MLT 635-130 PS+ ST4 OLD	-	-	-	-	-	X	X
MLT 635-140 V+ ST4 OLD	-	-	-	-	-	X	X
MLT 730-115 V CP ST4 OLD	-	-	-	X	-	X	-
MLT 730-115 V ST4 OLD	-	-	-	X	-	X	-
MLT 733-115 LSU ST4 OLD	-	-	-	-	-	X	X
MLT 733-115 ST4 OLD	-	-	-	-	-	X	X

Machines compatibility	FFGR 1500 / 600	FFGR 1500 / 900	FFGR 1700	FFGR 1950	FFGR 1950 DA	FFGR 2100	FFGR 2400
MLT 737-130 PS+ ST4 OLD	-	-	-	-	-	X	X
MLT 741-140 V+ ST4 OLD	-	-	-	-	-	X	X
MLT 840-145 PS+ OLD	-	-	-	-	-	-	X
MLT 940-140 V+ ST4 OLD	-	-	-	-	-	X	X
MLT 1040-145 PS+ L OLD	-	-	-	-	-	-	X
MLT-X 737-130 PS+ OLD	-	-	-	-	-	X	X
MLT-X 737-130 PS+ (S2) OLD	-	-	-	-	-	X	X
MLT-X 741-140 V+ S1 OLD	-	-	-	-	-	X	X
MLT-X 840-140 PS+ OLD	-	-	-	-	-	-	X
MLT-X 1040-140 PS+ L OLD	-	-	-	-	-	-	X

TABLE SYMBOL					
	No predisposition required		Hydraulic line		Return piping to hydraulic oil tank
	Electric predisposition		Platform predisposition		Tyre handler, cylinder handler predisposition

Manure Fork With Grapple - Dimensional drawing

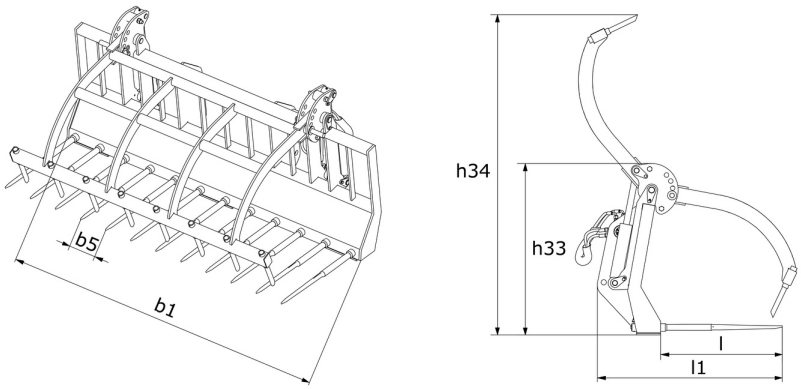

Head Office
B.P. 249 - 430 rue de l'Aubinière
44150 Ancenis Cedex - France
Tel: +33 (0)2 40 09 10 11 - Fax: +33 (0)2 40 09 10 97
www.manitou.com

This publication provides a description of the configuration versions and options for Manitou products, which may differ for equipment. The equipment presented in this brochure may be part of a series, as an option, or it may not be available, depending on the versions. Manitou reserves the right, at any time and without notice, to amend the specifications described and represented. The specifications provided do not bind the manufacturer. For more details, please contact your Manitou agent. This is not a contractually binding document. The presentation of the products is not contractually binding. List of specifications non-exhaustive. The logos as well as the visual identity of the company are owned by Manitou and cannot be used without authorisation. All rights reserved. The photos and diagrams contained in this brochure are only provided for consultation and information purposes.
MANITOU BF SA - Limited company with board of directors - Share capital: 39,668,399 euros - 857 802 508 RCS Nantes