Technical sheet :

MSI 50 ST5

MANITOU
HANDLING YOUR WORLD

	Technical characteristics		Metric
1.1	Manufacturer		MANITOU
1.2	Model Name		MSI 50 ST5
1.3	Power source		Diesel
1.4	Operator type		Seated
1.5	Max. capacity	Q	5000 kg
1.6	Load center of gravity	c	600 mm
1.8	Load distance, centre of drive axle to fork	x	701 mm
1.9	Wheelbase	y	2075 mm
	Standard mast reference of the machine		FVD 37
	Weight		
2.1	Service weight		8420 kg
2.2	Weight on front axle (laden) / rear axle (laden)		11470 kg / 1660 kg
2.3	Weight on front axle (Unladen) / rear axle (Unladen)		3490 kg / 4820 kg
	Wheels		
3.1	Tires type		Pneumatic
3.2	Dimensions of front wheels		315/70 R22,5 KMAX S
3.3	Dimensions of rear wheels		225/75 R15 XZM
3.5	Number of front wheels / rear wheels		2 / 2
3.5.2	Number of drive wheels		2
3.6	Front wheel gauge	b10	1420 mm
3.7	Rear wheel gauge	b11	1142 mm
	Dimensions		
4.7	Height of overhead guard (cabin)	h6	2440 mm
4.8	Seat height/stand height	h7	1435 mm
4.12	Height of towing bar (coupling height)	h10	605 mm
4.19	Overall length	l1	4584 mm
4.20	Length to face of forks	l2	3384 mm
4.21	Overall width	b1	1732 mm
4.22	Forks section / width / length	s / e / l	60 mm x 150 mm x 1200 mm
4.23	Fork carriage ISO 2328 (class/form) A/B		4A
4.24	Fork carriage width	b3	1670 mm
4.31	Ground clearance below mast	m1	185 mm
4.32	Ground clearance at centre of wheelbase	m2	220 mm
4.33	Aisle Width for pallets 1000 x 1200 crossways	Ast	5241 mm
4.35	Turning radius	Wa	2950 mm
	Performances		
5.1	Travel speed (laden / unladen)		20 km/h-20 km/h
5.2	Lifting speed (laden / unladen)		0.37 m/s-0.39 m/s
5.3	Lowering speed (laden / unladen)		0.48 m/s-0.34 m/s
5.5	Drawbar pull (Laden / Unladen)		3393 daN / 2471 daN
5.7	Gradeability (laden / unladen)		32 % / 29 %
5.10	Service brake		Hydraulic
	Transmission type		Hydrostatic
	Engine		
7.1	Engine brand / model / norm		Deutz / TCD 2,9L / Stage V
7.2	Engine power (Hp / kW)		75 Hp/55 kW
7.3	Rated speed		2200 rpm
7.4	Number of cylinders / Capacity of cylinders		4 - 2900 cm³
	Miscellaneous		
8.1	Type of drive control		Electronic
8.2	Working hydraulic pressure for attachments		230 bar
8.3	Oil flow rate for attachments		45 l/min
8.4	Sound level at the driver's ear according to DIN 12 053		81 dB

MSI 50 ST5 - Dimensional drawing

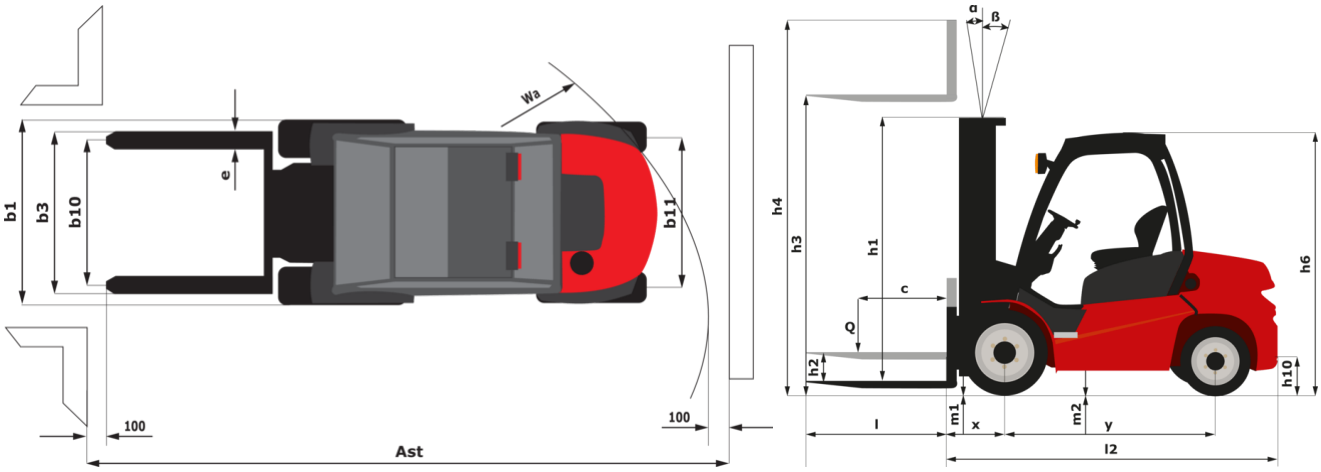

Characteristics of masts and residual capacities

Full Visibility Duplex (FVD)		FVD 30	FVD 33	FVD 35	FVD 37	FVD 40	FVD 45	FVD 50
α - Mast/fork carriage tilt, forward	°	10	10	10	10	10	10	10
β - Mast/fork carriage tilt, backward	°	12	12	12	12	12	12	12
h1 - Mast lowered height	mm	2425	2575	2675	2775	2925	3175	3425
h3 - Mast lifting height	mm	3000	3300	3500	3700	4000	4500	5000
h4 - Mast extended height	mm	3972	4272	4472	4672	4972	5472	5972
Residual capacity at max height	kg	5000	5000	5000	5000	5000	5000	5000
Residual capacity with hooked-on side shift at max heigth	kg	5000	5000	5000	5000	5000	5000	5000
Height at max capacity	mm	3000	3300	3500	3700	4000	4500	5000
Height at max capacity with hooked-on sideshift	mm	3000	3300	3500	3700	4000	4500	5000

Free Lift Triplex (FLT)		FLT 37	FLT 40	FLT 43	FLT 45	FLT 47	FLT 50	FLT 55	FLT 60
α - Mast/fork carriage tilt, forward	°	10	10	10	10	10	10	10	10
β - Mast/fork carriage tilt, backward	°	12	12	12	12	12	12	12	12
h1 - Mast lowered height	mm	2175	2275	2375	2450	2510	2625	2775	2950
h2 - Mast free lift	mm	1258	1358	1458	1533	1593	1708	1858	2033
h3 - Mast lifting height	mm	3700	4000	4300	4500	4700	5000	5500	6000
h4 - Mast extended height	mm	4672	4972	5272	5472	5672	5972	6472	6972
Residual capacity at max height	kg	5000	5000	5000	5000				4300
Residual capacity with hooked-on side shift at max heigth	kg	5000	5000	5000	5000				
Height at max capacity	mm	3700	4000	4300	4500	2500	2500	2500	2500
Height at max capacity with hooked-on sideshift	mm	3700	4000	4300	4500				

Head Office
B.P. 249 - 430 rue de l'Aubinière
44150 Ancenis Cedex - France
Tel: +33 (0)2 40 09 10 11 - Fax: +33 (0)2 40 09 10 97
www.manitou.com

This publication provides a description of the configuration versions and options for Manitou products, which may differ for equipment. The equipment presented in this brochure may be part of a series, as an option, or it may not be available, depending on the versions. Manitou reserves the right, at any time and without notice, to amend the specifications described and represented. The specifications provided do not bind the manufacturer. For more details, please contact your Manitou agent. This is not a contractually binding document. The presentation of the products is not contractually binding. List of specifications non-exhaustive. The logos as well as the visual identity of the company are owned by Manitou and cannot be used without authorisation. All rights reserved. The photos and diagrams contained in this brochure are only provided for consultation and information purposes.
MANITOU BF SA - Limited company with board of directors - Share capital: 39,668,399 euros - 857 802 508 RCS Nantes