Technical sheet :

MSI 35 ST5

MANITOU
HANDLING YOUR WORLD

	Technical characteristics		Metric
1.1	Manufacturer		Manitou
1.2	Model Name		MSI 35 ST5
1.3	Power source		Diesel
1.4	Operator type		Seated
1.5	Max. capacity	Q	3500 kg
1.6	Load center of gravity	c	500 mm
1.8	Load distance, centre of drive axle to fork	x	631 mm
1.9	Wheelbase	y	1900 mm
	Standard mast reference of the machine		FVD 33
	Weight		
2.1	Service weight		4780 kg
2.2	Weight on front axle (laden) / rear axle (laden)		7350 kg / 850 kg
2.3	Weight on front axle (Unladen) / rear axle (Unladen)		1710 kg / 3070 kg
	Wheels		
3.1	Tires type		Pneumatic
3.2	Dimensions of front wheels		300-15/18 6T P43
3.3	Dimensions of rear wheels		7.00-12/12 ED PLUS
3.5	Number of front wheels / rear wheels		2 / 2
3.5.2	Number of drive wheels		2
3.6	Front wheel gauge	b10	1044 mm
3.7	Rear wheel gauge	b11	1108 mm
	Dimensions		
4.7	Height of overhead guard (cabin)	h6	2095 mm
4.8	Seat height/stand height	h7	972 mm
4.19	Overall length	l1	4289 mm
4.20	Length to face of forks	l2	3139 mm
4.21	Overall width	b1	1330 mm
4.22	Forks section / width / length	s / e / l	45 mm x 125 mm x 1200 mm
4.23	Fork carriage ISO 2328 (class/form) A/B		3A
4.24	Fork carriage width	b3	1260 mm
4.31	Ground clearance below mast	m1	260 mm
4.32	Ground clearance at centre of wheelbase	m2	238 mm
4.33	Aisle Width for pallets 1000 x 1200 crossways	Ast	4711 mm
4.35	Turning radius	Wa	2680 m
	Performances		
5.1	Travel speed (laden / unladen)		21 km/h-21 km/h
5.2	Lifting speed (laden / unladen)		0.50 m/s-0.50 m/s
5.3	Lowering speed (laden / unladen)		0.50 m/s-0.30 m/s
5.5	Drawbar pull (Laden)		1900 daN
5.7	Gradeability (laden)		24 %
5.10	Service brake		Hydraulic brakes by loss of pressure
	Transmission type		Hydrostatic
	Engine		
7.1	Engine brand / model / norm		Kubota / D1803 CRT E5B / Stage V
7.2	Engine power (Hp / kW)		50 Hp/37 kW
7.3	Rated speed		2700 rpm
7.4	Number of cylinders / Capacity of cylinders		3 - 1826 cm³
	Miscellaneous		
8.1	Type of drive control		Electronic
8.2	Working hydraulic pressure for attachments		230 bar
8.3	Oil flow rate for attachments		45 l/min
8.4	Sound level at the driver's ear according to DIN 12 053		81 dB

MSI 35 ST5 - Dimensional drawing

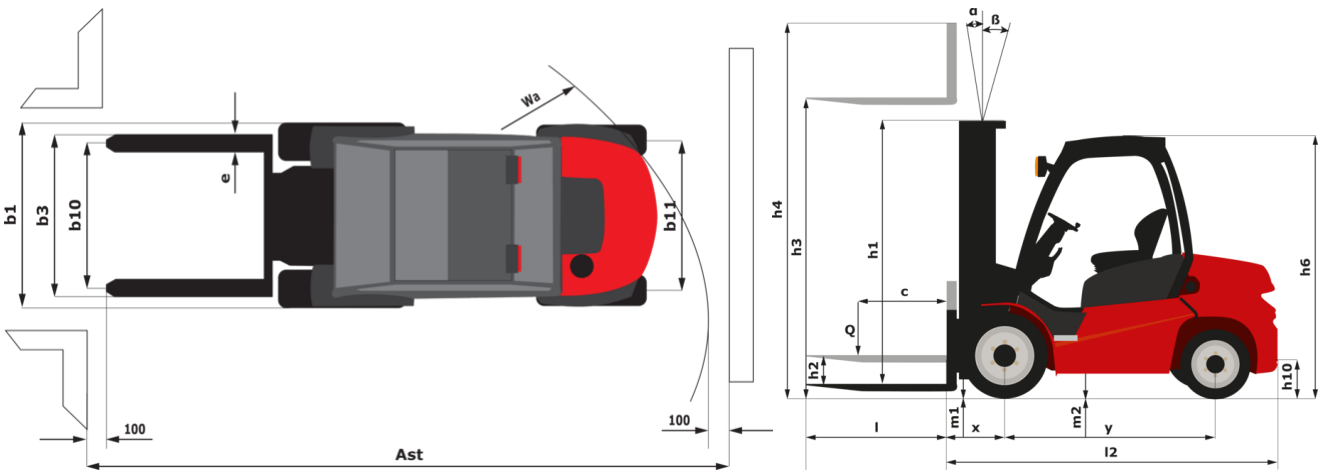

Characteristics of masts and residual capacities

Full Visibility Duplex (FVD)		FVD 30	FVD 33	FVD 37	FVD 40	FVD 45
α - Mast/fork carriage tilt, forward	°	12	12	12	12	12
β - Mast/fork carriage tilt, backward	°	10	10	10	10	10
h1 - Mast lowered height	mm	2136	2286	2546	2736	2986
h2 - Mast free lift	mm	90	90	90	90	90
h3 - Mast lifting height	mm	3000	3300	3700	4000	4500
h4 - Mast extended height	mm	3738	4038	4438	4738	5238
Residual capacity at max height	kg	3500	3500	3500	3500	3500
Residual capacity with hooked-on side shift at max heigth	kg	3500	3500	3500	3500	3500
Height at max capacity	mm	3000	3300	3700	4000	4500
Height at max capacity with hooked-on sideshift	mm	3000	3300	3700	4000	4500

Free Lift Triplex (FLT)		FLT 34	FLT 37	FLT 40	FLT 43	FLT 47	FLT 55	FLT 60
α - Mast/fork carriage tilt, forward	°	12	12	12	12	12	6	6
β - Mast/fork carriage tilt, backward	°	10	10	10	10	10	6	6
h1 - Mast lowered height	mm	1936	2036	2136	2286	2386	2736	2986
h2 - Mast free lift	mm	1208	1308	1408	1558	1658	2008	2258
h3 - Mast lifting height	mm	3400	3700	4000	4300	4700	5500	6000
h4 - Mast extended height	mm	4184	4484	4784	5084	5484	6284	6784
Residual capacity at max height	kg	3500	3500	3500	2600	1800		
Residual capacity with hooked-on side shift at max heigth	kg	3500	3500	3500	3200	1800		
Height at max capacity	mm	3400	3700	4000	4000	3500	2500	2500
Height at max capacity with hooked-on sideshift	mm	3400	3700	4000	4000	3500		

Head Office
B.P. 249 - 430 rue de l'Aubinière
44150 Ancenis Cedex - France
Tel: +33 (0)2 40 09 10 11 - Fax: +33 (0)2 40 09 10 97
www.manitou.com

This publication provides a description of the configuration versions and options for Manitou products, which may differ for equipment. The equipment presented in this brochure may be part of a series, as an option, or it may not be available, depending on the versions. Manitou reserves the right, at any time and without notice, to amend the specifications described and represented. The specifications provided do not bind the manufacturer. For more details, please contact your Manitou agent. This is not a contractually binding document. The presentation of the products is not contractually binding. List of specifications non-exhaustive. The logos as well as the visual identity of the company are owned by Manitou and cannot be used without authorisation. All rights reserved. The photos and diagrams contained in this brochure are only provided for consultation and information purposes.
MANITOU BF SA - Limited company with board of directors - Share capital: 39,668,399 euros - 857 802 508 RCS Nantes