Technical sheet :

# MSI 25 ST5

MANITOU
HANDLING YOUR WORLD

| | Technical characteristics | | Metric |
|---|---|---|---|
| 1.1 | Manufacturer | | Manitou |
| 1.2 | Model Name | | MSI 25 ST5 |
| 1.3 | Power source | | Diesel |
| 1.4 | Operator type | | Seated |
| 1.5 | Max. capacity | Q | 2500 kg |
| 1.6 | Load center of gravity | c | 500 mm |
| 1.8 | Load distance, centre of drive axle to fork | x | 621 mm |
| 1.9 | Wheelbase | y | 1900 mm |
| | Standard mast reference of the machine | | FVD 33 |
| | **Weight** | | |
| 2.1 | Service weight | | 3900 kg |
| 2.2 | Weight on front axle (laden) / rear axle (laden) | | 5730 kg / 670 kg |
| 2.3 | Weight on front axle (Unladen) / rear axle (Unladen) | | 1590 kg / 2310 kg |
| | **Wheels** | | |
| 3.1 | Tires type | | Pneumatic |
| 3.2 | Dimensions of front wheels | | 300-15/18 6T P43 |
| 3.3 | Dimensions of rear wheels | | 7.00-12/12 ED PLUS |
| 3.5 | Number of front wheels / rear wheels | | 2 / 2 |
| 3.5.2 | Number of drive wheels | | 2 |
| 3.6 | Front wheel gauge | b10 | 1044 mm |
| 3.7 | Rear wheel gauge | b11 | 1108 mm |
| | **Dimensions** | | |
| 4.7 | Height of overhead guard (cabin) | h6 | 2095 mm |
| 4.8 | Seat height/stand height | h7 | 972 mm |
| 4.19 | Overall length | l1 | 4193 mm |
| 4.20 | Length to face of forks | l2 | 2993 mm |
| 4.21 | Overall width | b1 | 1330 mm |
| 4.22 | Forks section / width / length | s / e / l | 40 mm x 100 mm x 1200 mm |
| 4.23 | Fork carriage ISO 2328 (class/form) A/B | | 2A |
| 4.24 | Fork carriage width | b3 | 1260 mm |
| 4.31 | Ground clearance below mast | m1 | 260 mm |
| 4.32 | Ground clearance at centre of wheelbase | m2 | 238 mm |
| 4.33 | Aisle Width for pallets 1000 x 1200 crossways | Ast | 4641 mm |
| 4.35 | Turning radius | Wa | 2620 mm |
| | **Performances** | | |
| 5.1 | Travel speed (laden / unladen) | | 21 km/h-21 km/h |
| 5.2 | Lifting speed (laden / unladen) | | 0.50 m/s-0.50 m/s |
| 5.3 | Lowering speed (laden / unladen) | | 0.50 m/s-0.30 m/s |
| 5.5 | Drawbar pull (Laden) | | 1900 daN |
| 5.7 | Gradeability (laden) | | 31 % |
| 5.10 | Service brake | | Hydraulic brakes by loss of pressure |
| | Transmission type | | Hydrostatic |
| | **Engine** | | |
| 7.1 | Engine brand / model / norm | | Kubota / D1803 CRT E5B / Stage V |
| 7.2 | Engine power (Hp / kW) | | 50 Hp/37 kW |
| 7.3 | Rated speed | | 2700 rpm |
| 7.4 | Number of cylinders / Capacity of cylinders | | 3 - 1826 cm³ |
| | **Miscellaneous** | | |
| 8.1 | Type of drive control | | Electronic |
| 8.2 | Working hydraulic pressure for attachments | | 220 bar |
| 8.3 | Oil flow rate for attachments | | 45 l/min |
| 8.4 | Sound level at the driver's ear according to DIN 12 053 | | 81 dB |

## MSI 25 ST5 - Dimensional drawing

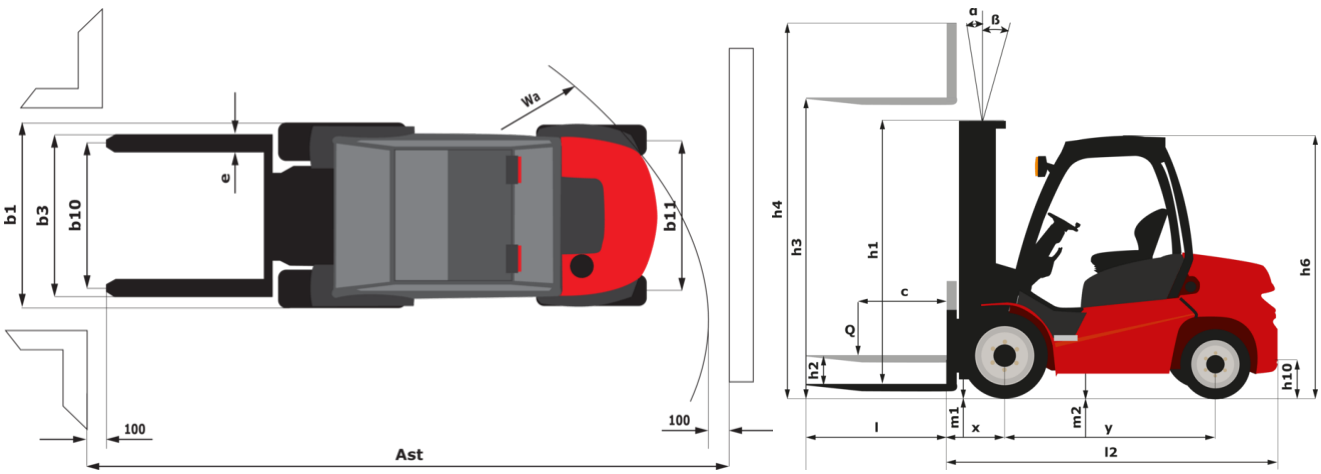

# Characteristics of masts and residual capacities

| Full Visibility Duplex (FVD) | | FVD 30 | FVD 33 | FVD 37 | FVD 40 | FVD 45 |
|---|---|---|---|---|---|---|
| α - Mast/fork carriage tilt, forward | ° | 12 | 12 | 12 | 12 | 12 |
| β - Mast/fork carriage tilt, backward | ° | 10 | 10 | 10 | 10 | 10 |
| h1 - Mast lowered height | mm | 2136 | 2286 | 2546 | 2736 | 2986 |
| h2 - Mast free lift | mm | 85 | 85 | 85 | 85 | 85 |
| h3 - Mast lifting height | mm | 3000 | 3300 | 3700 | 4000 | 4500 |
| h4 - Mast extended height | mm | 3738 | 4038 | 4438 | 4738 | 5238 |
| Residual capacity at max height | kg | 2500 | 2500 | 2500 | 2500 | 2500 |
| Residual capacity with hooked-on side shift at max heigth | kg | 2500 | 2500 | 2500 | 2500 | 2500 |
| Height at max capacity | mm | 3000 | 3300 | 3700 | 4000 | 4500 |
| Height at max capacity with hooked-on sideshift | mm | 3000 | 3300 | 3700 | 4000 | 4500 |

| Free Lift Triplex (FLT) | | FLT 34 | FLT 37 | FLT 40 | FLT 43 | FLT 47 | FLT 55 | FLT 60 |
|---|---|---|---|---|---|---|---|---|
| α - Mast/fork carriage tilt, forward | ° | 12 | 12 | 12 | 12 | 12 | 6 | 6 |
| β - Mast/fork carriage tilt, backward | ° | 10 | 10 | 10 | 10 | 10 | 6 | 6 |
| h1 - Mast lowered height | mm | 1936 | 2036 | 2136 | 2286 | 2386 | 2736 | 2986 |
| h2 - Mast free lift | mm | 1183 | 1283 | 1383 | 1483 | 1633 | 1893 | 2083 |
| h3 - Mast lifting height | mm | 3400 | 3700 | 4000 | 4300 | 4700 | 5500 | 6000 |
| h4 - Mast extended height | mm | 4184 | 4484 | 4784 | 5116 | 5484 | 6356 | 6916 |
| Residual capacity at max height | kg | 2500 | 2500 | 2500 | 2500 | 2500 | 2300 | |
| Residual capacity with hooked-on side shift at max heigth | kg | 2500 | 2500 | 2500 | 2500 | 2500 | 2300 | |
| Height at max capacity | mm | 3400 | 3700 | 4000 | 4300 | 4700 | 5200 | 2500 |
| Height at max capacity with hooked-on sideshift | mm | 3400 | 3700 | 4000 | 4300 | 4700 | 5200 | |

| Full Visibility Triplex (FVT) | | FVT 33 |
|---|---|---|
| α - Mast/fork carriage tilt, forward | ° | 12 |
| β - Mast/fork carriage tilt, backward | ° | 10 |
| h1 - Mast lowered height | mm | 1826 |
| h2 - Mast free lift | mm | 72 |
| h3 - Mast lifting height | mm | 3300 |
| h4 - Mast extended height | mm | 4027 |
| Height at max capacity | mm | 2500 |

**Head Office**
B.P. 249 - 430 rue de l'Aubinière
44150 Ancenis Cedex - France
Tel: +33 (0)2 40 09 10 11 - Fax: +33 (0)2 40 09 10 97
www.manitou.com

This publication provides a description of the configuration versions and options for Manitou products, which may differ for equipment. The equipment presented in this brochure may be part of a series, as an option, or it may not be available, depending on the versions. Manitou reserves the right, at any time and without notice, to amend the specifications described and represented. The specifications provided do not bind the manufacturer. For more details, please contact your Manitou agent. This is not a contractually binding document. The presentation of the products is not contractually binding. List of specifications non-exhaustive. The logos as well as the visual identity of the company are owned by Manitou and cannot be used without authorisation. All rights reserved. The photos and diagrams contained in this brochure are only provided for consultation and information purposes.
MANITOU BF SA - Limited company with board of directors - Share capital: 39,668,399 euros - 857 802 508 RCS Nantes