Technical sheet :

MRT 2570

VISION +

MANITOU
HANDLING YOUR WORLD

Capacities		Metric
Max. capacity		7000 kg
Max. lifting height		24.80 m
Maximum outreach		20.50 m
Weight and dimensions		
Overall length (with forks)	l1	8.87 m
Length to face of forks	l2	7.67 m
Overall width	b1	2.50 m
Overall height	h17	3.10 m
Overall cab width	b4	0.96 m
External turning radius (over tyres)	Wa1	4.63 m
Ground clearance	m4	0.38 m
Wheelbase	y	3.25 m
Tilt-up angle	a4	12 °
Tilt-down angle	a5	110 °
Turret rotation		360 °
Overall weight		21300 kg
Forks length / width / section	l / e / s	1200 mm x 125 mm x 60 mm
Wheels		
Standard tires		445/65 R22,5
Drive wheels (front / rear)		2 / 2
Steering mode		2 wheel steer, 4 wheel steer, Crab mode
Stabilisers		
Stabilizers Type		Telescopic Duplex
Controls for stabs		Stabs Commands Individual or Simultaneous
Engine		
Engine brand		Yanmar
Engine norm		Stage V, Tier 4
Engine model		4TN107FTT-6SMU1
Engine power (Hp / kW)		173 Hp / 127 kW
Max. torque / Engine rotation (min)		805 Nm @ 1500 rpm
Number of cylinders - Capacity of cylinders		4 - 4567 cm³
Engine cooling system		Water cooled
Electric circuit		
Number of batteries / Battery voltage		2 x 12 V
12V Battery capacity		120 Ah
Battery starting current		(EN)850 A
Transmission		
Transmission type		Hydrostatic
Gearbox / Number of gears (forward) / Number of gears (reverse)		Speedshift / 2 / 2
Max. travel speed		40 km/h
Drawbar pull		9200 daN
Parking brake		Automatic negative parking brake
Service brake		Oil-immersed multi-discs braking on front & rear axles
Performances		
Gradeability (laden / unladen)		32.40 % / 41.40 %
Hydraulics		
Hydraulic pump type		Variable displacement pump
Hydraulic flow		172 l/min
Hydraulic Pressure		350 bar
Tank capacities		
Engine oil		13 l
Fuel		320 l
Diesel Exhaust fluid (AdBlue® type)		24 l
Noise and vibration		
Noise at driving position (LpA)		67 dB
Noise to environment (LwA)		108 dB
Vibration on hands/arms		< 2.50 m/s²
Miscellaneous		
Steering wheels (front / rear)		2 / 2
Controls		2 Joysticks
Cab certification		Cabin ROPS - FOPS level 2
Attachment recognition system (E-Reco)		Standard

MRT 2570 - Dimensional drawing

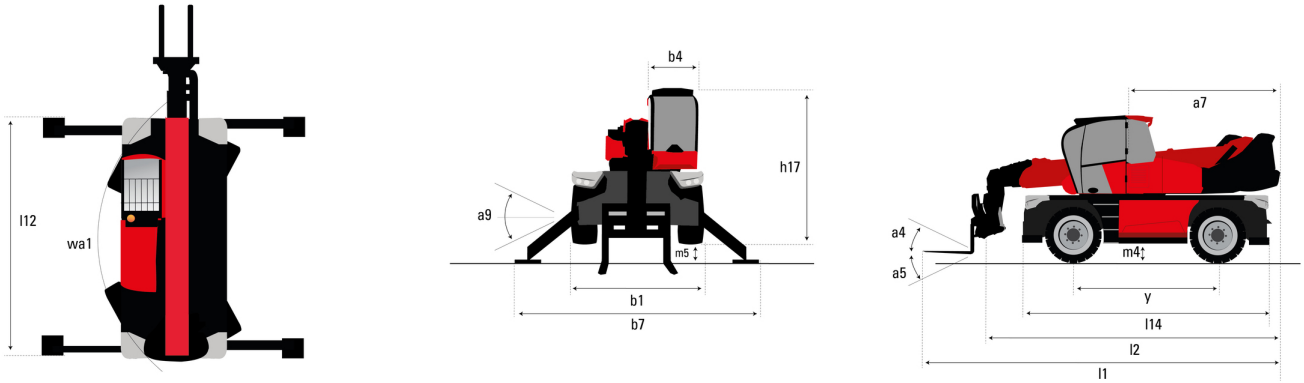

Other data		Metric
Length of frame	l14	5.92 m
Wheelbase	y	3.25 m
Ground clearance	m4	0.38 m
Counterweight offset (turret at 90°)	a7	3.45 m
Overall length at stabilisers	l12	5.62 m
Overall width with stabilisers extended	b7	6.04 m
Frame leveling corrector	a9	+/- 7 °
Ground clearance under front tires on stabilizers	m5	0.40 m

MRT 2570 - Load chart

Machine on tires with forks Metric

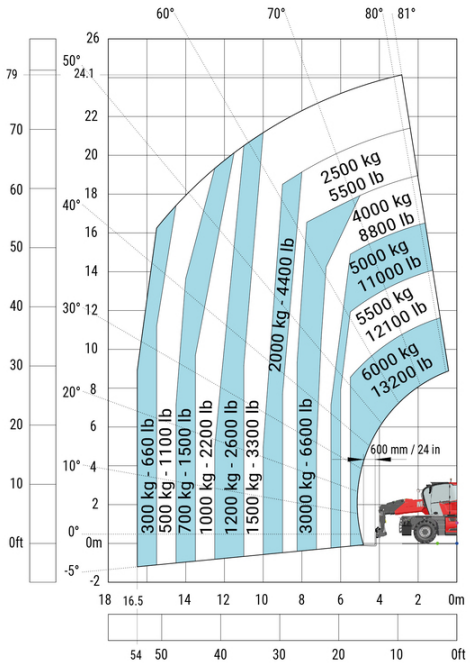

Machine on lowered stabilisers with forks Metric

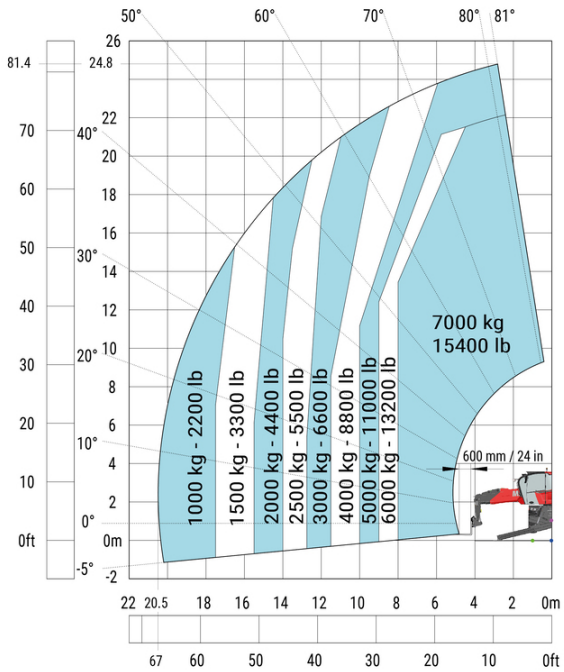

Machine on lowered stabilisers with winch 6000 kg (Metric)

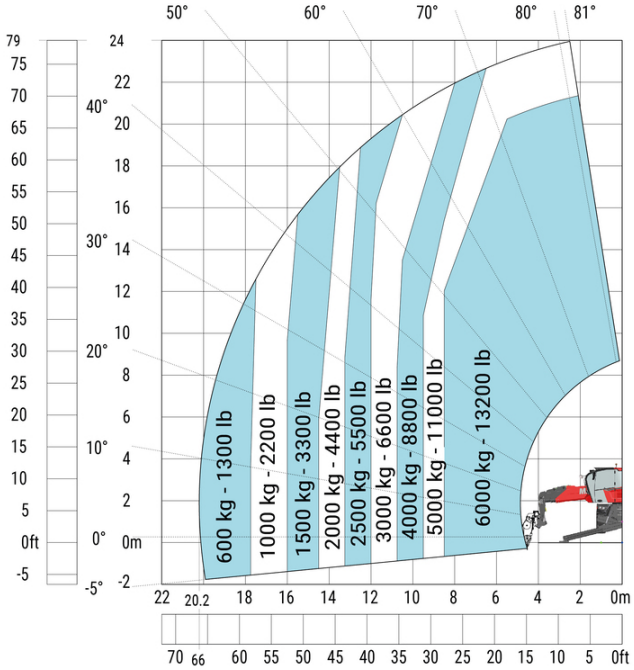

Machine on lowered stabilisers with winch 7200 kg (metric)

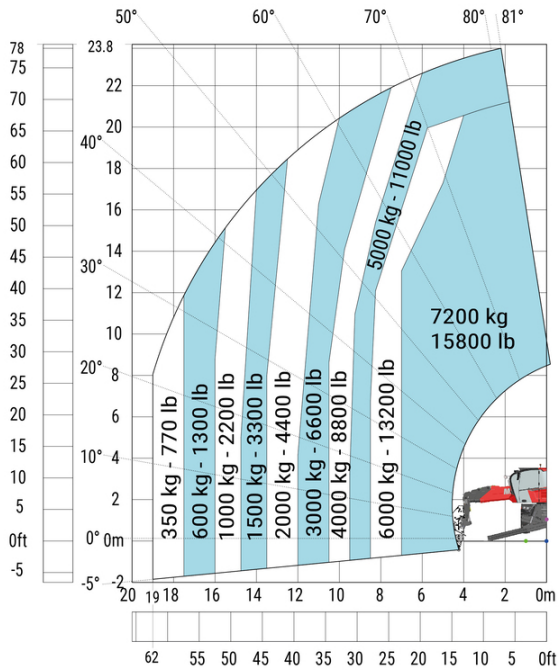

Machine on lowered stabilisers with 1500 kg jib Metric

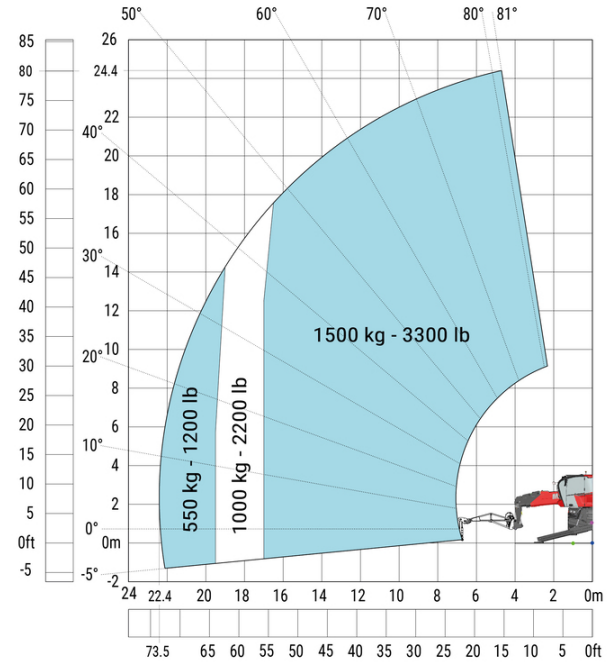

Machine on lowered stabilisers with 2000 kg jib (Metric)

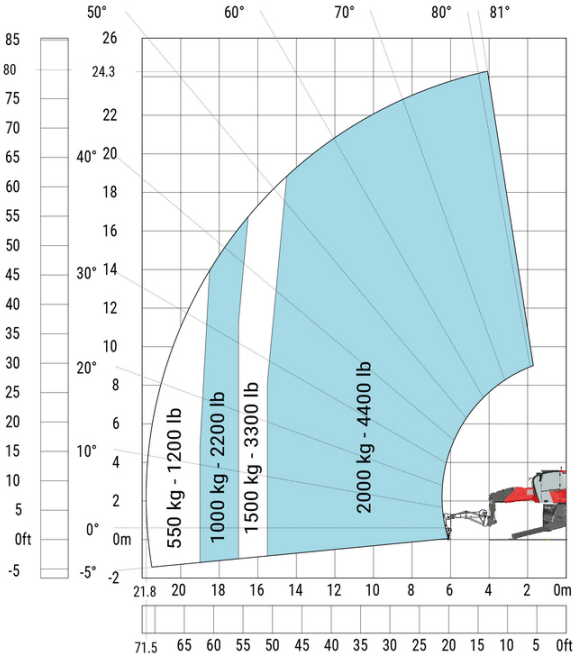

Machine on lowered stabilisers with extensible jib with winch (Metric)

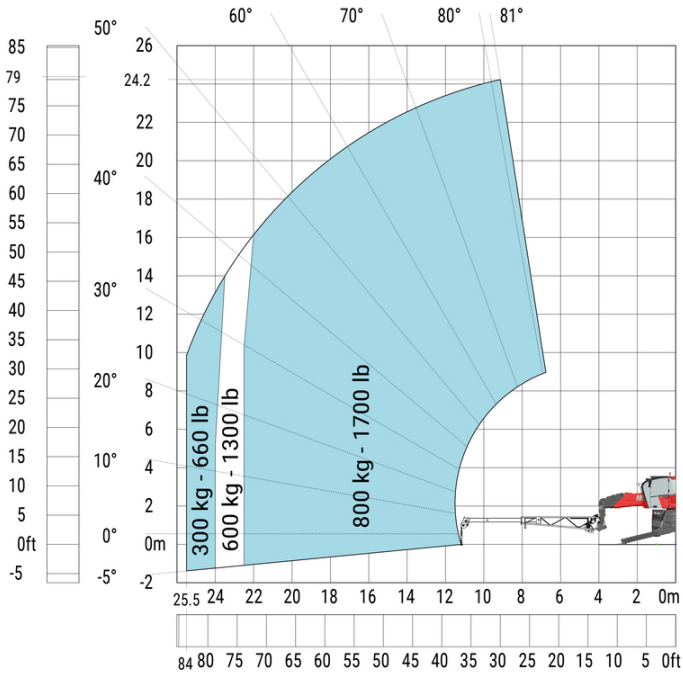

Machine on lowered stabilisers with hook 9000 kg (Metric)

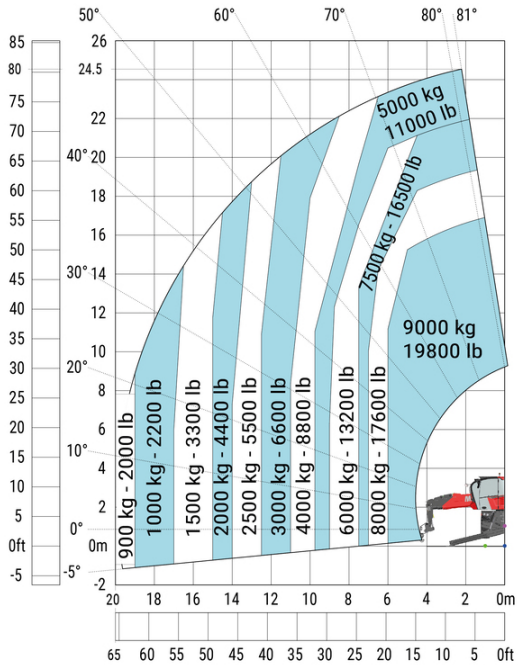

Machine on lowered stabilisers with 365 kg platform Metric

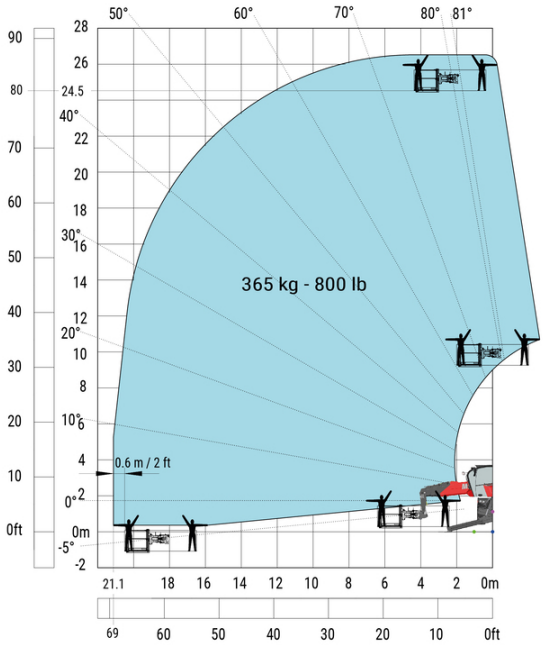

Machine on lowered stabilisers with 1000 kg platform Metric

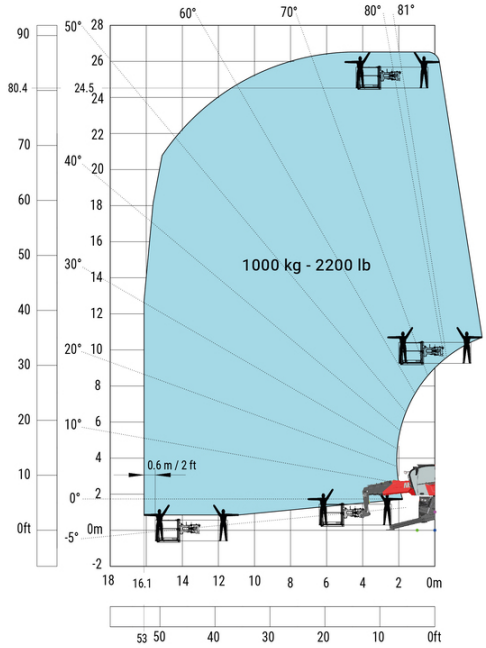

Head Office
B.P. 249 - 430 rue de l'Aubinière
44150 Ancenis Cedex - France
Tel: +33 (0)2 40 09 10 11 - Fax: +33 (0)2 40 09 10 97
www.manitou.com

This publication provides a description of the configuration versions and options for Manitou products, which may differ for equipment. The equipment presented in this brochure may be part of a series, as an option, or it may not be available, depending on the versions. Manitou reserves the right, at any time and without notice, to amend the specifications described and represented. The specifications provided do not bind the manufacturer. For more details, please contact your Manitou agent. This is not a contractually binding document. The presentation of the products is not contractually binding. List of specifications non-exhaustive. The logos as well as the visual identity of the company are owned by Manitou and cannot be used without authorisation. All rights reserved. The photos and diagrams contained in this brochure are only provided for consultation and information purposes.
MANITOU BF SA - Limited company with board of directors - Share capital: 39,668,399 euros - 857 802 508 RCS Nantes