Technical sheet :

MRT 2260 E

OXYGEN

MANITOU
HANDLING YOUR WORLD

Capacities		Metric
Max. capacity		6000 kg
Max. lifting height		21.80 m
Maximum outreach		18.20 m
Weight and dimensions		
Overall length (with forks)	l1	8.17 m
Length to face of forks	l2	6.97 m
Overall width	b1	2.50 m
Overall height	h17	3.10 m
Overall cab width	b4	0.96 m
External turning radius (over tyres)	Wa1	4.46 m
Ground clearance	m4	0.38 m
Wheelbase	y	3.05 m
Tilt-up angle	a4	12 °
Tilt-down angle	a5	110 °
Turret rotation		360 °
Overall weight		18000 kg
Forks length / width / section	l / e / s	100 mm x 1200 mm x 60 mm
Wheels		
Standard tires		445/65 R22,5
Drive wheels (front / rear)		2 / 2
Steering mode		2 wheel steer, 4 wheel steer, Crab mode
Stabilisers		
Stabilizers Type		Telescopic Duplex
Controls for stabs		Stabs Commands Individual or Simultaneous
Electric circuit		
Number of batteries / Battery voltage		2 x 12 V
12V Battery capacity		120 Ah
Battery starting current		(EN)850 A
Engine/Battery		
Battery technology		Lithium-ion
Battery capacity		105 Ah
Battery nominal voltage		624 V
Battery max. voltage		680 V
Battery energy		65 kW/h
Drive motor power rating		107 kW
Hydraulic motor power		84 kW
Charger Power / Phase / Current type		11 kW / Single-phase or three-phase / AC
Transmission		
Transmission type		Electrical
Number of gears (forward / reverse)		2 / 2
Max. travel speed		37 km/h
Drawbar pull		8600 daN
Drawbar pull continuous		4300 daN
Parking brake		Automatic negative parking brake
Service brake		Oil-immersed multi-discs braking on front & rear axles
Performances		
Max Gradeability (laden / unladen)		36 % / 48 %
Gradeability continuous (laden / unladen)		18 % / 23 %
Hydraulics		
Hydraulic pump type		Fixed displacement piston
Hydraulic flow		175 l/min
Hydraulic Pressure		350 bar
Hydraulic tank capacity		200 l
Noise and vibration		
Noise at driving position (LpA)		65 dB
Noise to environment (LwA)		103 dB
Vibration on hands/arms		< 2.50 m/s²
Miscellaneous		
Steering wheels (front / rear)		2 / 2
Controls		2 Joysticks
Cab certification		Cabin ROPS - FOPS level 2
Attachment recognition system (E-Reco)		Standard

MRT 2260 e - Dimensional drawing

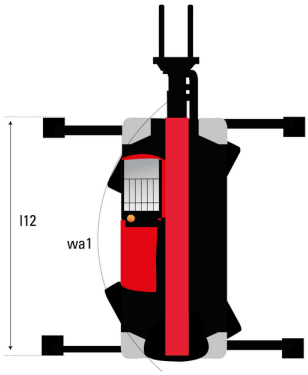

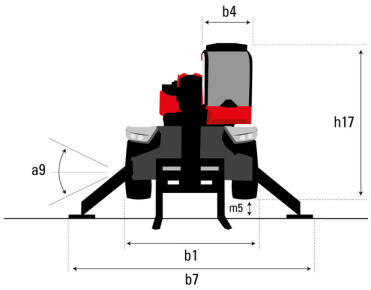

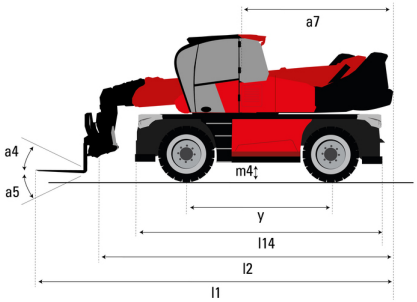

Other data		Metric
Length of frame	l14	5.69 m
Wheelbase	y	3.05 m
Ground clearance	m4	0.38 m
Counterweight offset (turret at 90°)	a7	2.97 m
Overall length at stabilisers	l12	5.30 m
Overall width with stabilisers extended	b7	5.79 m
Frame leveling corrector	a9	+/- 7 °
Ground clearance under front tires on stabilizers	m5	0.43 m

MRT 2260 e - Load chart

Machine on tires with forks Metric

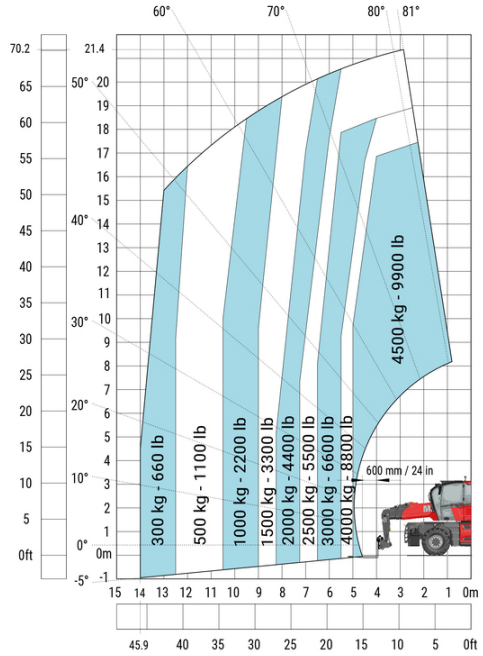

Machine on lowered stabilisers with forks (CAF) Metric

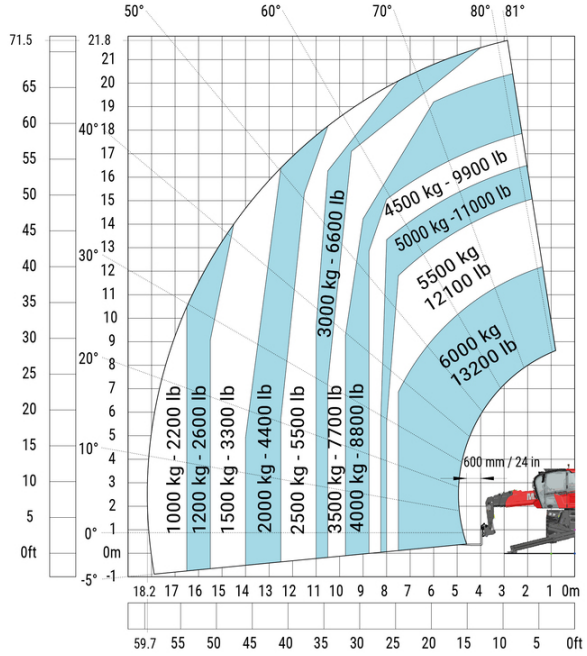

Machine on lowered stabilisers with winch 6000 kg (Metric)

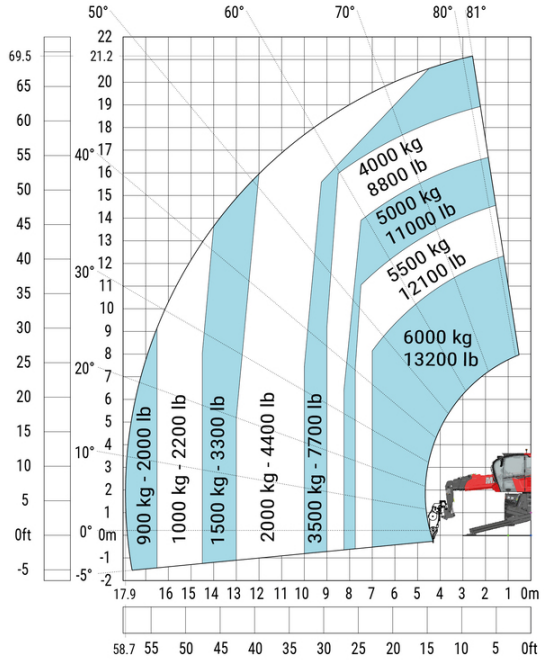

Machine on lowered stabilisers with 1500 kg jib with winch (Metric)

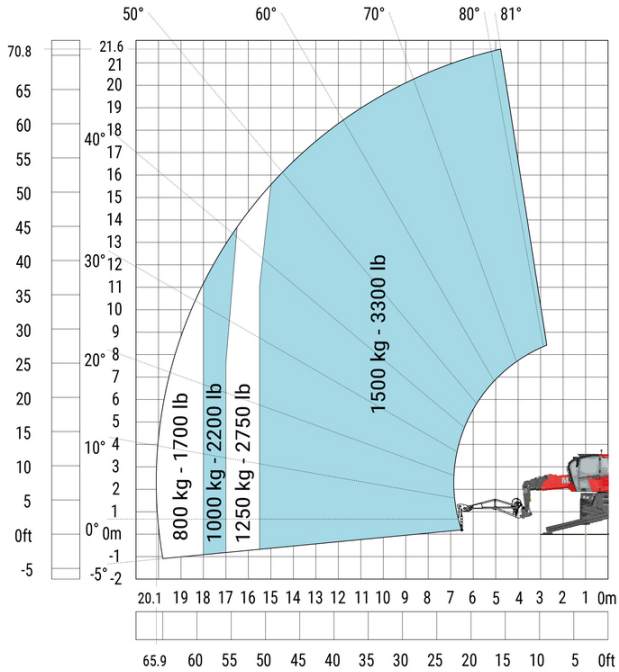

Machine on lowered stabilisers with extensible jib with winch (Metric)

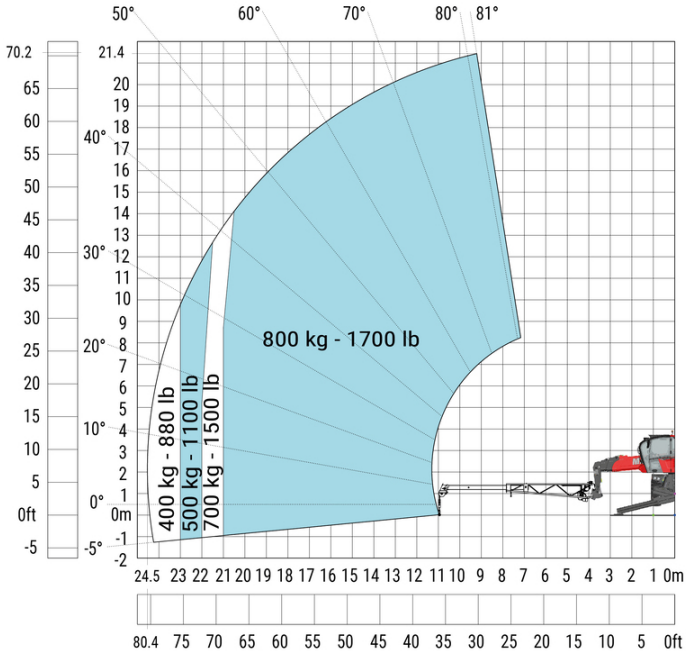

Machine on lowered stabilisers with hook 6000 kg (Metric)

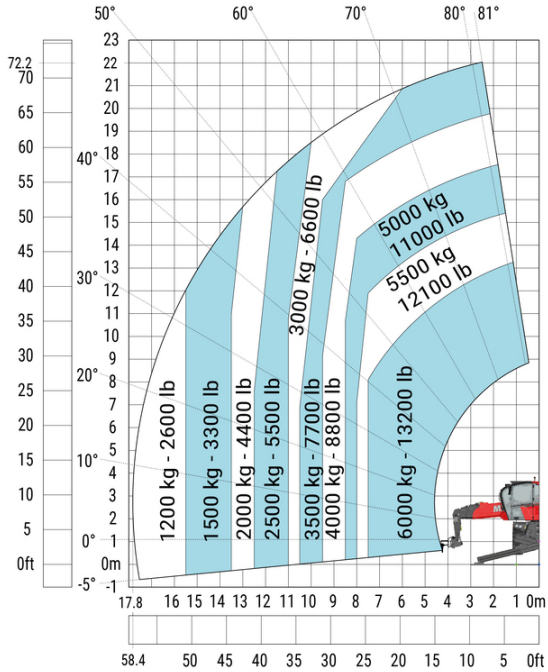

Machine on lowered stabilisers with 365 kg platform Metric

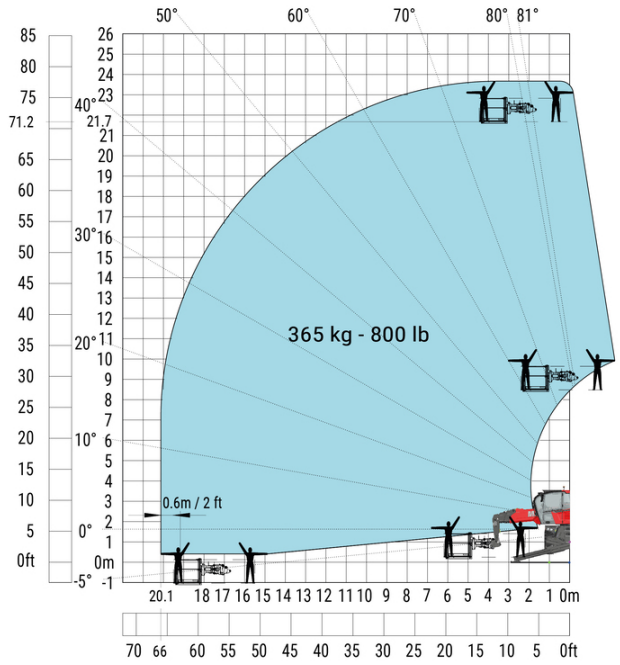

Machine on lowered stabilisers with 1000 kg platform Metric

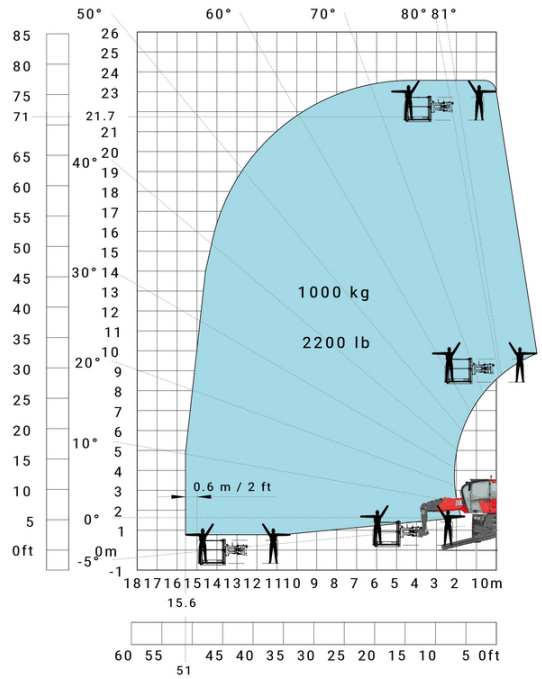

Machine on lowered stabilisers with 3D positive Metric

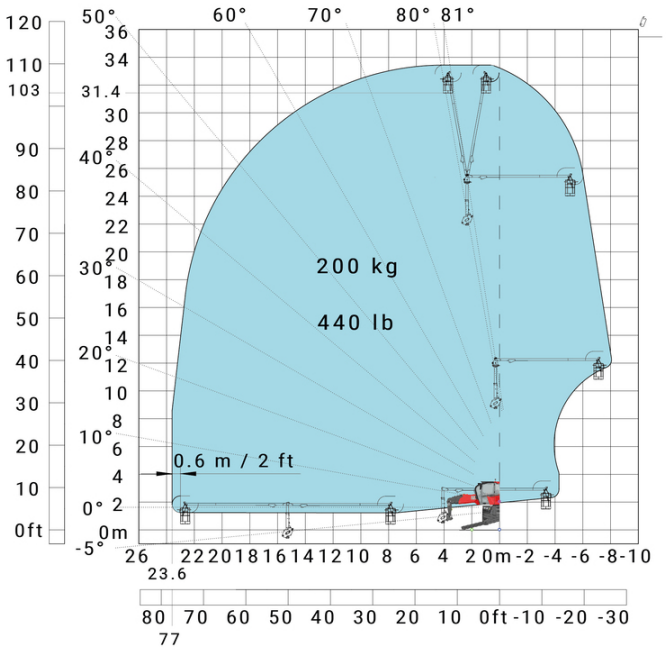

Machine on lowered stabilisers with 3D positive / negative Metric

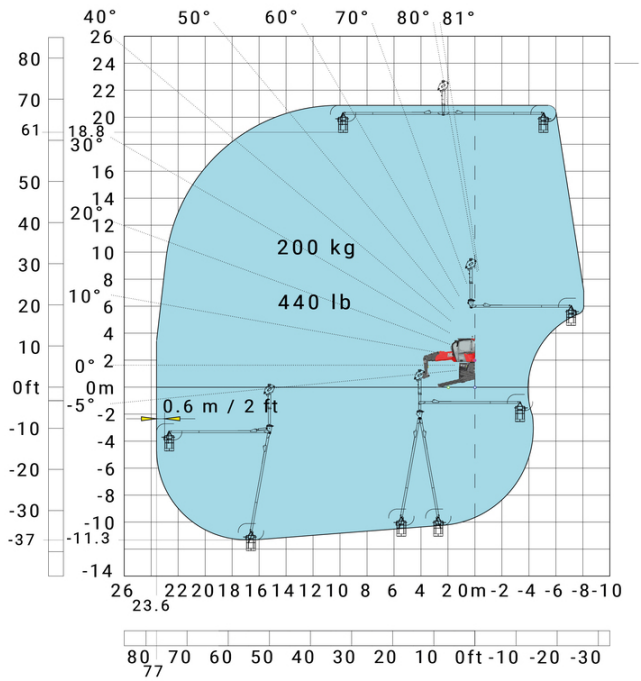

Equipment

Optional
Additional battery high voltage 65 kWh
E-xtra generator 18.4 kW

Equipment: E-xtra generator 18.4 kW

Engine		Metric
Engine brand / norm		Yanmar / Stage V / Tier 4
Engine model		3TNV80F-ZXKMU
Number of cylinders - Capacity of cylinders		3 - 1267 cm³
Max. torque / Engine rotation (min)		74.50 Nm @ 1900 rpm
Engine power (Hp)		25 Hp
Engine power (kW)		18.40 kW
Engine rotation		2800 rpm
Engine cooling system		Water cooled
Tank capacities		
Fuel		65 l
Engine oil		3.40 l

Head Office
B.P. 249 - 430 rue de l'Aubinière
44150 Ancenis Cedex - France
Tel: +33 (0)2 40 09 10 11 - Fax: +33 (0)2 40 09 10 97
www.manitou.com

This publication provides a description of the configuration versions and options for Manitou products, which may differ for equipment. The equipment presented in this brochure may be part of a series, as an option, or it may not be available, depending on the versions. Manitou reserves the right, at any time and without notice, to amend the specifications described and represented. The specifications provided do not bind the manufacturer. For more details, please contact your Manitou agent. This is not a contractually binding document. The presentation of the products is not contractually binding. List of specifications non-exhaustive. The logos as well as the visual identity of the company are owned by Manitou and cannot be used without authorisation. All rights reserved. The photos and diagrams contained in this brochure are only provided for consultation and information purposes.
MANITOU BF SA - Limited company with board of directors - Share capital: 39,668,399 euros - 857 802 508 RCS Nantes