Technical sheet :

MRT 1645 75

VISION

MANITOU
HANDLING YOUR WORLD

Capacities		Metric
Max. capacity		4500 kg
Max. lifting height		15.80 m
Maximum outreach		13.50 m
Weight and dimensions		
Overall length (with forks)	l1	7.58 m
Length to face of forks	l2	6.38 m
Overall width	b1	2.42 m
Overall height	h17	3.04 m
Overall cab width	b4	0.96 m
Ground clearance	m4	0.37 m
Wheelbase	y	2.43 m
Tilt-up angle	a4	12 °
Tilt-down angle	a5	105 °
Turret rotation		400 °
Overall weight		13305 kg
Forks length / width / section	l / e / s	1200 mm x 125 mm x 50 mm
Wheels		
Standard tires		405/70-20
Drive wheels (front / rear)		2 / 2
Steering mode		2 wheel steer, 4 wheel steer, Crab mode
Stabilisers		
Stabilizers Type		Wing Type
Controls with stabs		Stabs Commands Individual or Simultaneous
Engine		
Engine brand		Deutz
Engine norm		Stage V, Tier 4
Engine model		TCD 3.6 L4
Engine power (Hp / kW)		75 Hp / 55.40 kW
Max. torque / Engine rotation (min)		405 Nm @ 1300 rpm
Number of cylinders - Capacity of cylinders		4 - 3620 cm³
Engine cooling system		Water cooled
Electric circuit		
Number of batteries / Battery voltage		2 x 12 V
12V Battery capacity		120 Ah
Battery starting current		(EN)850 A
Transmission		
Transmission type		Hydrostatic
Number of gears (forward / reverse)		2 / 2
Max. travel speed		25 km/h
Drawbar pull		9400 daN
Parking brake		Automatic negative parking brake
Service brake		Oil-immersed multi-discs braking on front & rear axles
Performances		
Gradeability (laden / unladen)		44.50 % / 44.50 %
Hydraulics		
Hydraulic pump type		Variable displacement pump
Hydraulic flow		116 l/min
Hydraulic Pressure		275 bar
Tank capacities		
Engine oil		11 l
Fuel tank		130 l
Noise and vibration		
Noise at driving position (LpA)		68 dB
Noise to environment (LwA)		104 dB
Vibration on hands/arms		< 2.50 m/s²
Miscellaneous		
Steering wheels (front / rear)		2 / 2
Controls		2 Joysticks
Cab certification		Cabin ROPS - FOPS level 2
Attachment recognition system (E-Reco)		Standard

MRT 1645 75 - Dimensional drawing

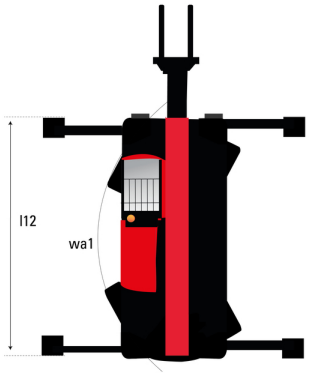

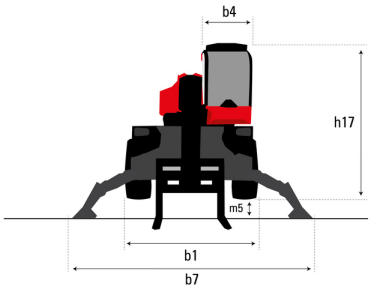

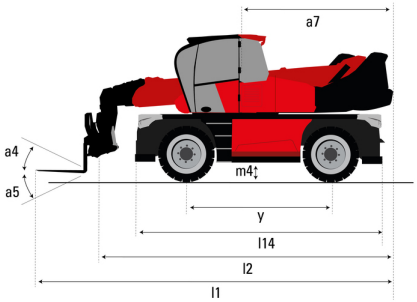

Other data		Metric
Length of frame	l14	4.67 m
Wheelbase	y	2.43 m
Ground clearance	m4	0.37 m
Counterweight offset (turret at 90Â°)	a7	2.50 m
Overall length at stabilisers	l12	4.41 m
Overall width with stabilisers extended	b7	4.01 m
Ground clearance under front tires on stabilizers	m5	0.18 m

MRT 1645 75 - Load chart

Machine on tires with forks Metric

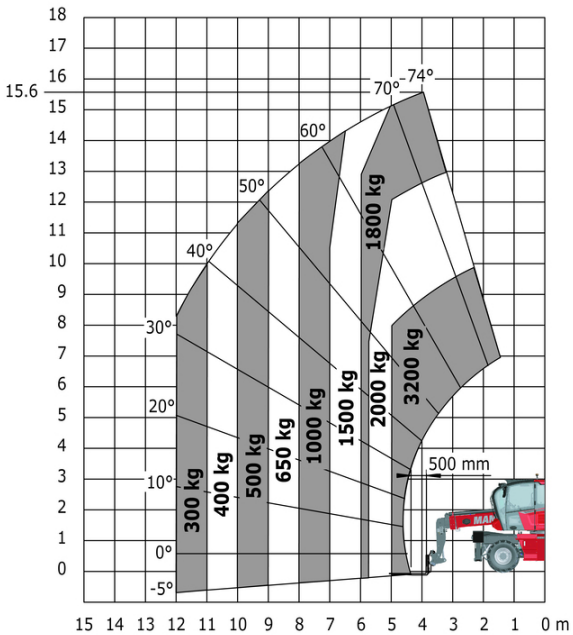

Machine on lowered stabilisers with forks Metric

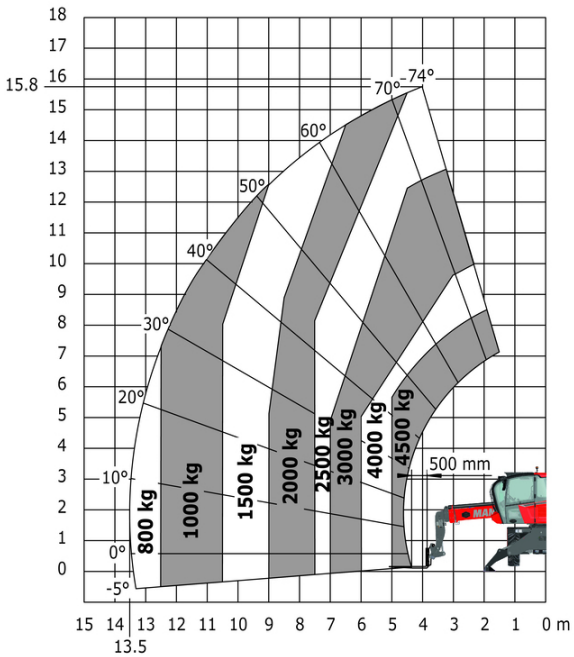

Machine on lowered stabilisers with winch 5000 kg Metric

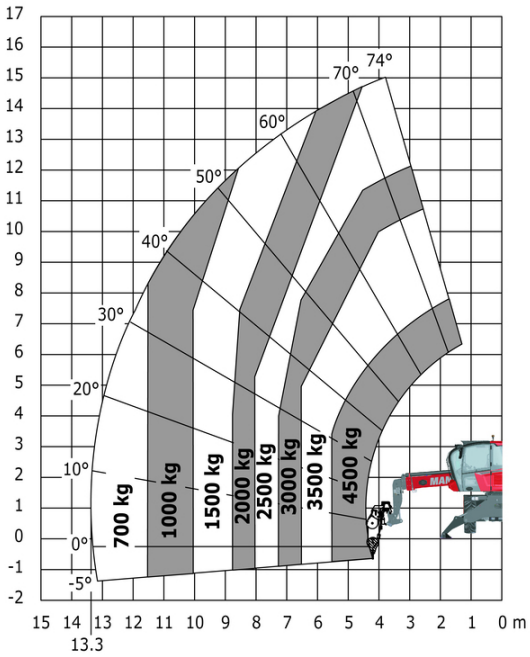

Machine on lowered stabilisers with 4000 kg jib (Metric)

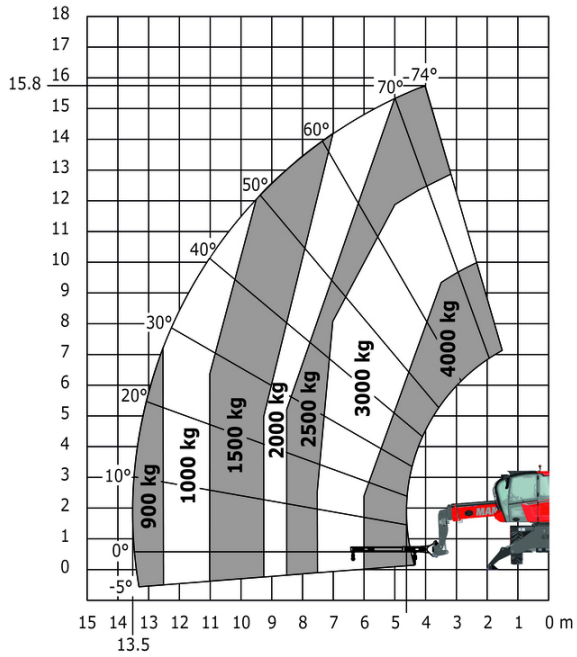

Machine on lowered stabilisers with 1500 kg jib with winch (Metric)

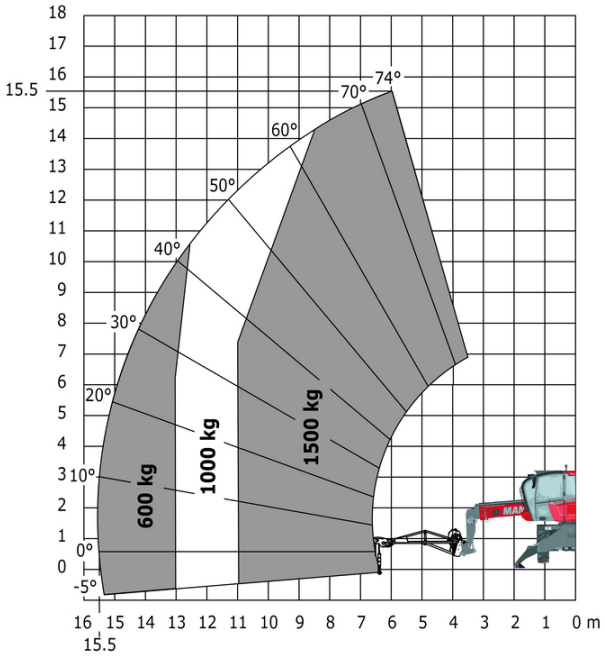

Machine on lowered stabilisers with hook 5000 kg (Metric)

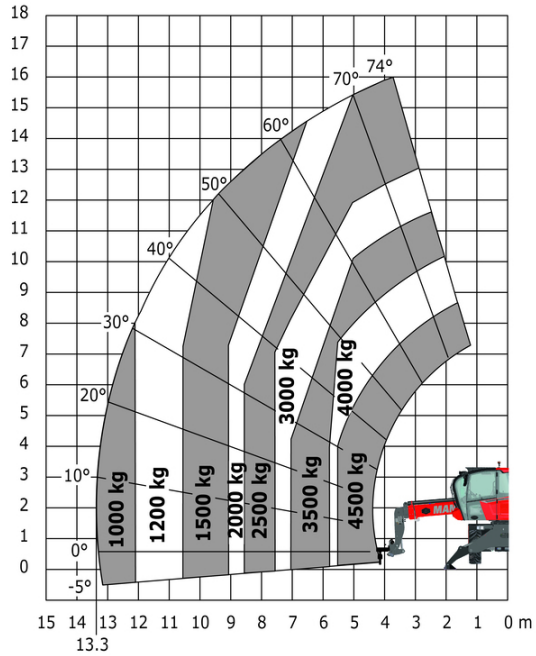

Machine on lowered stabilisers with 365 kg platform Metric

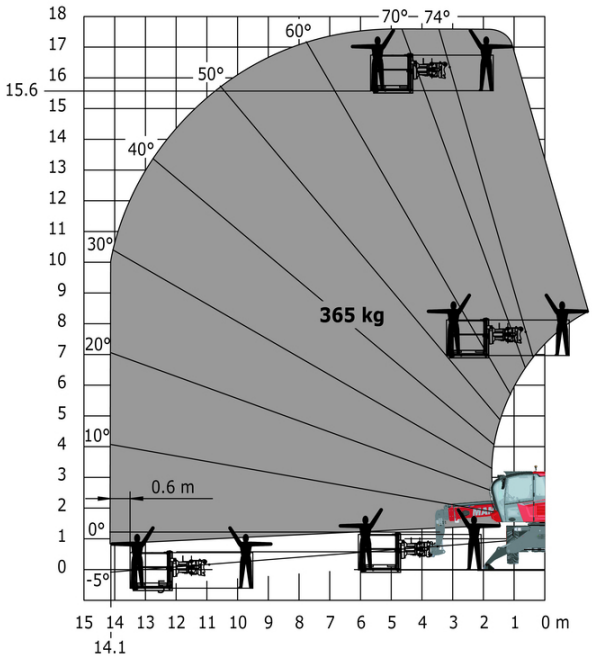

Machine on lowered stabilisers with 1000 kg platform Metric

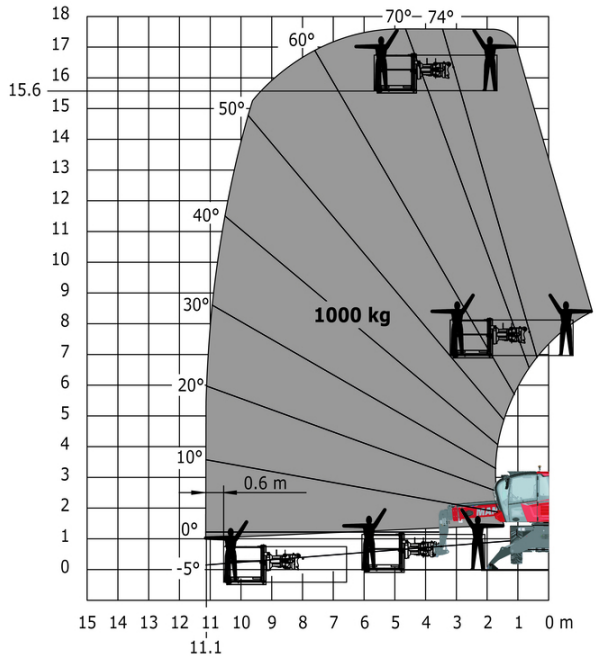

Head Office
B.P. 249 - 430 rue de l'Aubinière
44150 Ancenis Cedex - France
Tel: +33 (0)2 40 09 10 11 - Fax: +33 (0)2 40 09 10 97
www.manitou.com

This publication provides a description of the configuration versions and options for Manitou products, which may differ for equipment. The equipment presented in this brochure may be part of a series, as an option, or it may not be available, depending on the versions. Manitou reserves the right, at any time and without notice, to amend the specifications described and represented. The specifications provided do not bind the manufacturer. For more details, please contact your Manitou agent. This is not a contractually binding document. The presentation of the products is not contractually binding. List of specifications non-exhaustive. The logos as well as the visual identity of the company are owned by Manitou and cannot be used without authorisation. All rights reserved. The photos and diagrams contained in this brochure are only provided for consultation and information purposes.
MANITOU BF SA - Limited company with board of directors - Share capital: 39,668,399 euros - 857 802 508 RCS Nantes