Technical sheet :

MLT 961-160 V+ L

MANITOU
HANDLING YOUR WORLD

Capacities		Metric
Max. capacity	Q	6000 kg
Max. lifting height	h3	9 m
Maximum outreach		5.30 m
Reach at max. height		1.10 m
Breakout force with bucket		7300 daN
Weight and dimensions		
Unladen weight (with forks)		11950 kg
Ground clearance	m4	0.45 m
Wheelbase	y	3 m
Overall length to carriage (with hitch)	l11	6.10 m
Overall length to carriage (without hitch)	l3	5.97 m
Front overhang		1.65 m
Overall width	b1	2.48 m
Overall cab width	b4	0.99 m
Overall height	h17	2.55 m
Tilt-down angle	a5	135 °
Tilt-up angle	a4	12 °
External turning radius (over tyres)	Wa1	4.30 m
Standard tires		Alliance - A580 - 500/70 R24 164A8
Drive wheels (front / rear)		2 / 2
Steering mode		Manicrab, 2 wheel steer, 4 wheel steer, Crab mode
Frame leveling corrector	a9	7 °
Performances		
Lifting		8.50 s
Lowering		6.50 s
Extension		7 s
Retraction		6 s
Crowd		3.80 s
Dump		3.60 s
Engine		
Engine brand		Yanmar
Engine norm		Stage V / Tier 4 Final
Engine model		4TN107FTT-5SMUF
Number of cylinders - Capacity of cylinders		4 - 4567 cm³
Engine power (Hp / kW)		156 Hp / 115 kW
Max. torque / Engine rotation		805 Nm @1350 rpm
Drawbar pull (Laden)		9700 daN
Reversible fan		Standard
Engine cooling system		3 radiators water + intercooler + transmission oil
Transmission		
Transmission type		M-Vario Plus
Max. travel speed (may vary according to applicable regulations)		40 km/h
Parking brake		Automatic negative parking brake
Service brake		Oil-immersed multi-discs braking on front & rear axles
Hydraulics		
Hydraulic pump type		Variable displacement pump
Hydraulic flow - Pressure		200 l/min - 270 bar
Flow sharing distributor		Standard
Tank capacities		
Hydraulic tank capacity		180 l
Fuel		142 l
Diesel Exhaust fluid (AdBlue® type)		21.50 l
Noise and vibration		
Noise at driving position (LpA) tested following NF EN 12053 norm		69 dB
Noise to environment (LwA)		105 dB
Vibration on hands/arms		< 2.50 m/s²
Miscellaneous		
Tractor homologation		Tractor homologation
Cab certification		Cabin ROPS - FOPS level 2
Controls		JSM

Optional tires tab

	Overall height	Overall width
ALLIANCE - EM L-3/E3 - 17.5 R25	-	-
MICHELIN - BIBLOAD - 500/70 R24 164A8	-	-
MICHELIN - XHA - 17.5 R25	-	-
MICHELIN - XMCL - 500/70 R24 164A8	-	-
MITAS - EM60 - 17.5 R25	-	-
NOKIAN - TRI STEEL - 500/70 R24 164A8	-	-
SOLIDEAL - SOLIDAIR TLH - 14.00 R24	-	-
TRELLEBORG - TH400 - 500/70 R24 164A8	-	-
VREDESTEIN - ENDURION - 500/70 R24 164A8	-	-

MLT 961-160 V+ L - Dimensional drawing

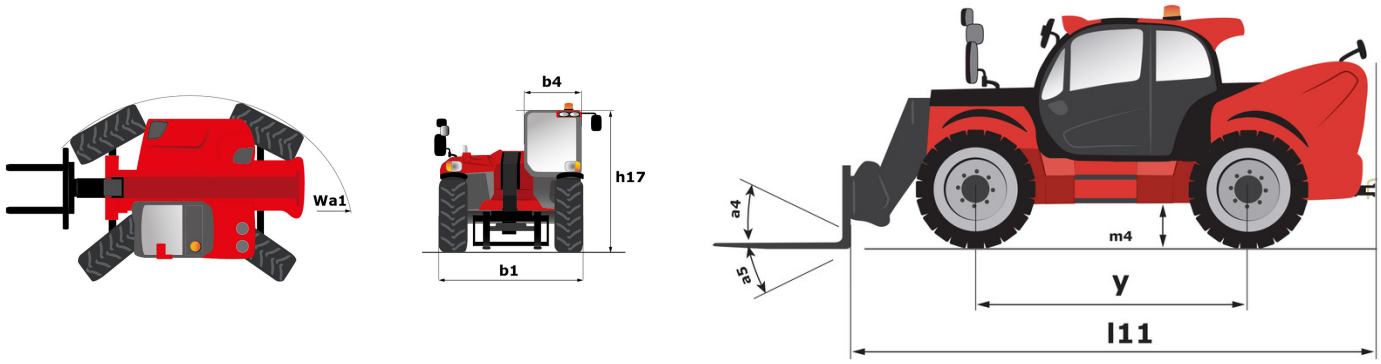

MLT 961-160 V+ L - Load chart

Machine on tires with forks Metric

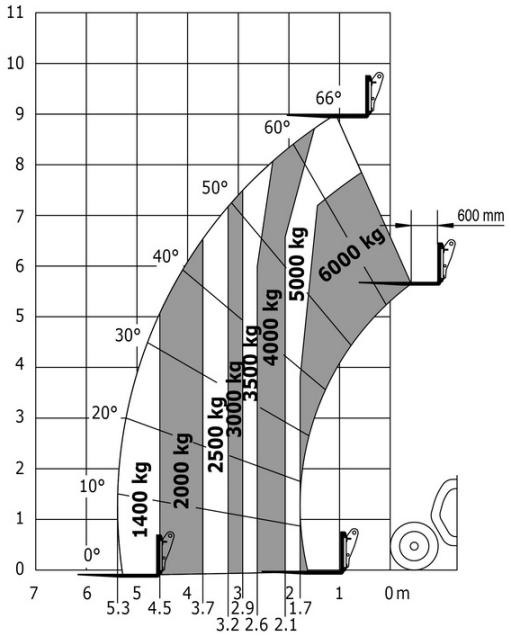

Head Office
B.P. 249 - 430 rue de l'Aubinière
44150 Ancenis Cedex - France
Tel: +33 (0)2 40 09 10 11 - Fax: +33 (0)2 40 09 10 97
www.manitou.com

This publication provides a description of the configuration versions and options for Manitou products, which may differ for equipment. The equipment presented in this brochure may be part of a series, as an option, or it may not be available, depending on the versions. Manitou reserves the right, at any time and without notice, to amend the specifications described and represented. The specifications provided do not bind the manufacturer. For more details, please contact your Manitou agent. This is not a contractually binding document. The presentation of the products is not contractually binding. List of specifications non-exhaustive. The logos as well as the visual identity of the company are owned by Manitou and cannot be used without authorisation. All rights reserved. The photos and diagrams contained in this brochure are only provided for consultation and information purposes.
MANITOU BF SA - Limited company with board of directors - Share capital: 39,668,399 euros - 857 802 508 RCS Nantes