Technical sheet :

MLT 940-140 V+ (S2)

MANITOU
HANDLING YOUR WORLD

Capacities		Metric
Max. capacity	Q	4000 kg
Max. lifting height	h3	9.10 m
Maximum outreach		6.55 m
Reach at max. height		2.40 m
Breakout force with bucket		5402 daN
Weight and dimensions		
Unladen weight (with forks)		8440 kg
Ground clearance	m4	0.42 m
Wheelbase	y	2.81 m
Overall length to carriage (with hitch)	l11	5.12 m
Front overhang		1.36 m
Overall width	b1	2.39 m
Overall cab width	b4	0.95 m
Overall height	h17	2.38 m
Tilt-down angle	a5	133 °
Tilt-up angle	a4	14 °
External turning radius (over tyres)	Wa1	3.93 m
Standard tires		Alliance - A580 - 460/70 R24 159A8
Drive wheels (front / rear)		2 / 2
Steering mode		Manicrab, 2 wheel steer, 4 wheel steer, Crab mode
Performances		
Lifting		6.50 s
Lowering		7.20 s
Extension		11 s
Retraction		8.10 s
Crowd		3.20 s
Dump		2.90 s
Engine		
Engine brand		Deutz
Engine norm		Stage V
Engine model		TCD 3.6 L4
Number of cylinders - Capacity of cylinders		4 - 3621 cm³
Engine power (Hp / kW)		136 Hp / 100 kW
Max. torque / Engine rotation		500 Nm @1600 rpm
Drawbar pull (Laden)		6200 daN
Reversible fan		Standard
Engine cooling system		Engine cooling system - 4 radiators (water + intercooler + hydraulic oil + hydraulic oil for transmission)
HVO validated (according to EN 15940 standard)		Yes
Transmission		
Transmission type		M-Vario Plus
Max. travel speed (may vary according to applicable regulations)		40 km/h
Differential lock		Limited slip differential on front axle
Parking brake		Automatic negative parking brake
Service brake		Oil-immersed multi-discs braking on front & rear axles
Hydraulics		
Hydraulic pump type		Variable displacement pump
Hydraulic flow - Pressure		170 l/min - 270 bar
Flow sharing distributor		Standard
Tank capacities		
Hydraulic tank capacity		135 l
Fuel		120 l
Diesel Exhaust fluid (AdBlue® type)		10 l
Noise and vibration		
Noise at driving position (LpA) tested following NF EN 12053 norm		72 dB
Vibration on hands/arms		< 2.50 m/s²
Miscellaneous		
Tractor homologation		Tractor homologation
Cab certification		Cabin ROPS - FOPS level 2
Controls		JSM

Optional tires tab

	Overall height	Overall width
ALLIANCE - A585 - 460/70 R24 159A8	2.37 m	2.40 m
NOKIAN - TRI STEEL - 460/65 R24 156A8	2.36 m	2.40 m
MICHELIN - BIBLOAD - 460/70 R24 159A8	2.37 m	2.40 m
MICHELIN - BIBLOAD - 500/70 R24 164A8	2.39 m	2.43 m
MICHELIN - XHA - 15.5 R25 158A2	2.37 m	2.40 m
MICHELIN - XMCL - 460/70 R24 159A8	2.37 m	2.40 m
MICHELIN - XMCL - 500/70 R24 164A8	2.39 m	2.43 m
TRELLEBORG - TH400 - 460/70 R24 159A8	2.37 m	2.40 m
TRELLEBORG - TH400 - 500/70 R24 164A8	2.39 m	2.42 m
TRELLEBORG - TH500 - 460/70 R24 159A8	2.37 m	2.40 m
VREDESTEIN - ENDURION - 460/70 R24 159A8	2.38 m	2.41 m
VREDESTEIN - ENDURION - 500/70 R24 164A8	2.41 m	2.44 m

Options / Finishing

S : Standard / O : Optional / - : Not available

	Classic	Premium	Elite	Platinum
Lifting function				
Attachment hydraulic locking	O	O	O	S
Intelligent hydraulics	O	O	S	S
Regenerative Hydraulics	O	S	S	S
Operator station				
Air suspension fabric seat - GRAMMER	O	S	-	-
Automatic air conditioning	O	S	S	S
Automatic wheel alignment	O	O	S	S
Bluetooth USB radio - With extra microphone - 100W	O	O	S	S
Bluetooth USB radio - With integrated microphone - 100W	O	S	-	-
Boom suspension - "Active CRC"	O	O	S	S
Exterior right electric rear-view mirror with de-icing	O	O	S	S
Extra front wiper	O	S	S	S
HighView camera on boom head (telescopic part)	O	O	O	S
Lateral wiper	S	S	S	S
Low frequency air suspension fabric seat - GRAMMER	O	O	S	-
Low frequency air suspension fabric seat with heating - GRAMMER	O	O	O	S
Mechanical suspension fabric seat - GRAMMER	S	-	-	-
SafeView camera pack - Right hand side and rear (x2)	O	O	O	S
Storage box - On the shelf	O	O	O	S
Tuner car radio - 50W	S	-	-	-
Vision screen - 7 in.	S	S	S	S
Motorization/Power				
Auto reversing fan	S	S	S	S
Continuous flow hydraulics	O	O	S	S
Hand throttle	S	S	S	S
Secondary functions				
Automatic greasing system (AGS) - Chassis + boom	O	O	O	S
Lighting				
LED+ side work lights (x4)	O	O	O	S
led front road lights	O	O	O	S
LED work lights - On the top of the boom (fixed part) (x2)	O	O	O	S

MLT 940-140 V+ (S2) - Dimensional drawing

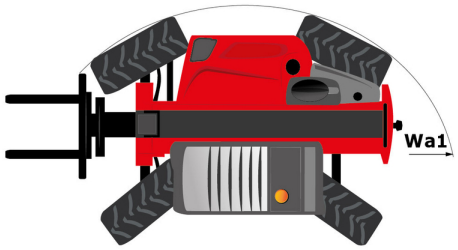

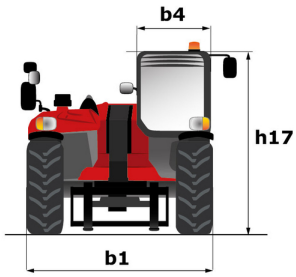

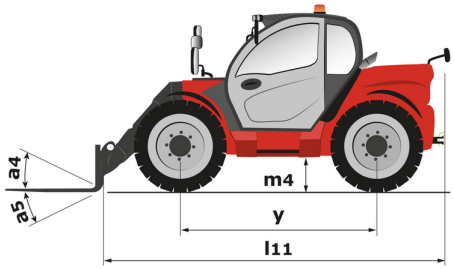

MLT 940-140 V+ (S2) - Load chart

Machine on tires with forks Metric

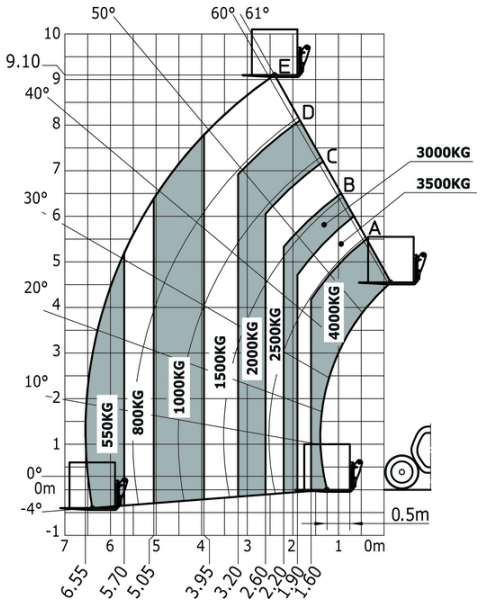

Head Office
B.P. 249 - 430 rue de l'Aubinière
44150 Ancenis Cedex - France
Tel: +33 (0)2 40 09 10 11 - Fax: +33 (0)2 40 09 10 97
www.manitou.com

This publication provides a description of the configuration versions and options for Manitou products, which may differ for equipment. The equipment presented in this brochure may be part of a series, as an option, or it may not be available, depending on the versions. Manitou reserves the right, at any time and without notice, to amend the specifications described and represented. The specifications provided do not bind the manufacturer. For more details, please contact your Manitou agent. This is not a contractually binding document. The presentation of the products is not contractually binding. List of specifications non-exhaustive. The logos as well as the visual identity of the company are owned by Manitou and cannot be used without authorisation. All rights reserved. The photos and diagrams contained in this brochure are only provided for consultation and information purposes.
MANITOU BF SA - Limited company with board of directors - Share capital: 39,668,399 euros - 857 802 508 RCS Nantes