Technical sheet :

MLA-T 533-145 V+ - ST5

MANITOU
HANDLING YOUR WORLD

Capacities		Metric
Static tipping load with forks (straight)		4978 kg
Static tipping load with forks (full turn)		4147 kg
Max. payload with forks as per EN 474-3 (80%)		3300 kg
Max. lifting height (below forks)	h3	5.20 m
Maximum outreach		3.30 m
Reach at max. height		1.20 m
Breakout force with bucket		6730 daN
Weight and dimensions		
Unladen weight (with forks)		8430 kg
Wheelbase	y	2.50 m
Overall height with cab	h17	2.70 m
Tilt-up angle	a4	9 °
Tilt-down angle	a5	156 °
Articulation angle	a19	45 °
Overall width less bucket	b1	2.29 m
Overall length - Less Bucket	l2	5.72 m
Standard tires		Alliance - A580 - 460/70 R24 159A8
Ground clearance	m4	0.39 m
Performances		
Crowd		3.50 s
Dump		2.70 s
Engine		
Engine brand		Deutz
Engine model		TCD_4_1_L4
Engine norm		Stage V
Number of cylinders / Capacity of cylinders		4 - 4038 cm³
Engine power (Hp / kW)		143 Hp / 105 kW
Max. torque / Engine rotation		550 Nm / 1600 rpm
Engine cooling system		3 radiators water + intercooler + hydraulic oil
Transmission		
Transmission type		M-Varioshift
Max. travel speed (may vary according to applicable regulations)		40 km/h
Differential lock		Limited slip differential on front and rear axles
Parking brake		Manual
Service brake		Hydraulic drum brake on front axle, acting on all 4 wheels
Hydraulics		
Hydraulic pump type		Variable displacement pump
Hydraulic flow - Pressure		158 l/min / 270 bar
Tank capacities		
Hydraulic oil		150 l
Fuel		150 l
Diesel Exhaust fluid (AdBlue® type)		10 l
Noise and vibration		
Noise at driving position (LpA) tested following NF EN 12053 norm		72 dB
Noise to environment (LwA)		107 dB
Vibration on hands/arms		< 2.50 m/s²
Miscellaneous		
Cab certification		Cabin ROPS - FOPS level 2

MLA-T 533-145 V+ - ST5 - Load chart

Machine on tires with forks - Load chart compliant with EN 474-3 (80%) Metric

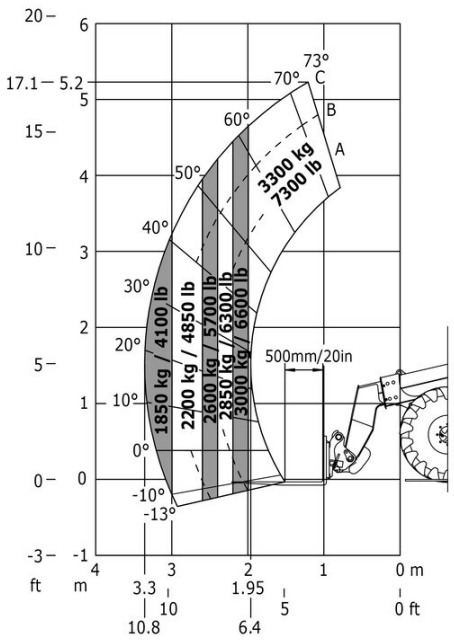

MLA-T 533-145 V+ - ST5 - Dimensional drawing

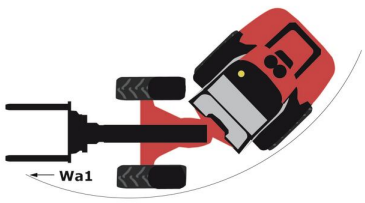

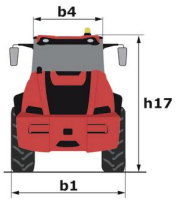

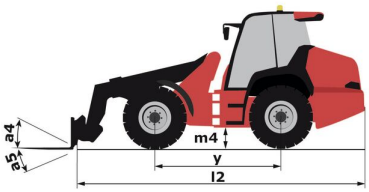

Head Office
B.P. 249 - 430 rue de l'Aubinière
44150 Ancenis Cedex - France
Tel: +33 (0)2 40 09 10 11 - Fax: +33 (0)2 40 09 10 97
www.manitou.com

This publication provides a description of the configuration versions and options for Manitou products, which may differ for equipment. The equipment presented in this brochure may be part of a series, as an option, or it may not be available, depending on the versions. Manitou reserves the right, at any time and without notice, to amend the specifications described and represented. The specifications provided do not bind the manufacturer. For more details, please contact your Manitou agent. This is not a contractually binding document. The presentation of the products is not contractually binding. List of specifications non-exhaustive. The logos as well as the visual identity of the company are owned by Manitou and cannot be used without authorisation. All rights reserved. The photos and diagrams contained in this brochure are only provided for consultation and information purposes.
MANITOU BF SA - Limited company with board of directors - Share capital: 39,668,399 euros - 857 802 508 RCS Nantes