Technical sheet :

MLA-T 516-75 H

MANITOU
HANDLING YOUR WORLD

Capacities		Metric
Static tipping load with bucket (straight)		3535 kg
Static tipping load with forks (straight)		2732 kg
Static tipping load with forks (full turn)		2000 kg
Max. payload with forks as per EN 474-3 (80%)		1600 kg
Max. height of bucket pivot point	h35	5.03 m
Max. lifting height (below forks)	h3	4.84 m
Maximum outreach		3.30 m
Weight and dimensions		
Unladen weight (with forks) with 4-post canopy		5543 kg
Overall width of 4 posts canopy	b22	1.28 m
Overall cab width	b4	1.28 m
Overall height with 4 posts canopy	h38	2.48 m
Articulation angle	a19	44 °
Overall width less bucket	b1	1.74 m
Overall length - Less Bucket	l2	4.95 m
Ground clearance	m4	0.31 m
Engine		
Engine brand		Deutz
Engine model		TD 3.6 L4
Engine norm		Stage V, Tier 4
Number of cylinders / Capacity of cylinders		4 - 3600 cm³
Engine power (Hp / kW)		74.30 Hp / 55.40 kW
Max. torque / Engine rotation		330 Nm / 1600 rpm
Engine cooling system		2 radiators water + hydraulic oil
Transmission		
Transmission type		Hydrostatic
Number of gears (forward / reverse)		2 / 2
Max. travel speed (may vary according to applicable regulations)		30 km/h
Travel speed (laden)		20 km/h
Differential lock		Front and rear locking of the machine
Parking brake		Manual
Service brake		Hydraulic drum brake on front axle, acting on all 4 wheels
Hydraulics		
Hydraulic pump type		Gear pump
Hydraulic flow - Pressure		70 l/min / 200 bar
High-Flow Option (l/min)		110 l/min
Drive hydraulic system pressure		380 bar
Tank capacities		
Hydraulic oil		74 l
Fuel		102 l
Noise and vibration		
Vibration on hands/arms		< 2.50 m/s²
Miscellaneous		
Cab certification		ROPS - FOPS cab (level 1)

Options / Finishing

S : Standard / O : Optional / - : Not available

	Essential	Classic	Premium
Lifting function			
Attachment hydraulic line	S	S	S
Boom suspension	O	O	S
Easy Connect System (ECS)	S	-	-
Hydraulic attachment locking	S	S	S
Operator station			
Adjustable and telescopic steering column	S	S	S
Air conditioning with manual adjustment	-	-	S
Air prefilter	S	-	-
Air suspension seat	-	O	S
Canopy	S	-	-
Closed cab with heating	-	-	S
Floor mat	S	S	S
Manual air conditioning	-	O	-
Suspension Seat - Mechanical	S	-	-
Tuner car radio - 50W	-	S	S
Motorization/Power			
Continuous flow hydraulics	S	S	S
Hand throttle	S	S	S
Self cleaning air prefilter	-	S	S
Simultaneous movements flow sharing distributor	S	S	S
Speed control	O	O	S
Third speed	O	O	S
Lighting			
Complete road lighting	O	-	S
Front and rear LED work lights on cab (x4 : 2 front + 2 rear)	O	O	S
Front and rear work lights on cab (x4)	S/O**	S	-

MLA-T 516-75 H - Load chart

Machine on tires with forks - Load chart compliant with EN 474-3 (80%) Metric

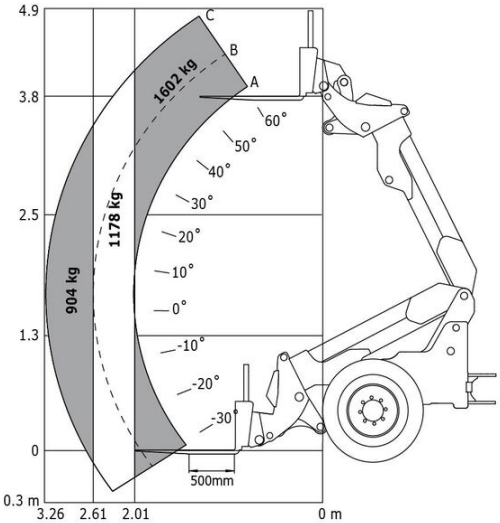

MLA-T 516-75 H - Dimensional drawing

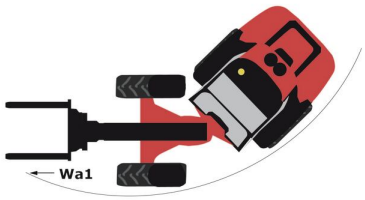

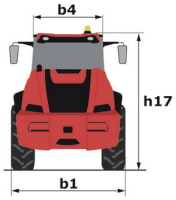

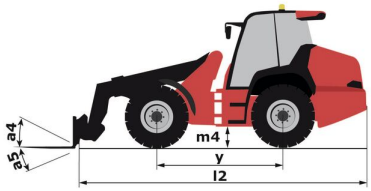

MANITOU
HANDLING YOUR WORLD

Head Office
B.P. 249 - 430 rue de l'Aubinière
44150 Ancenis Cedex - France
Tel: +33 (0)2 40 09 10 11 - Fax: +33 (0)2 40 09 10 97
www.manitou.com

This publication provides a description of the configuration versions and options for Manitou products, which may differ for equipment. The equipment presented in this brochure may be part of a series, as an option, or it may not be available, depending on the versions. Manitou reserves the right, at any time and without notice, to amend the specifications described and represented. The specifications provided do not bind the manufacturer. For more details, please contact your Manitou agent. This is not a contractually binding document. The presentation of the products is not contractually binding. List of specifications non-exhaustive. The logos as well as the visual identity of the company are owned by Manitou and cannot be used without authorisation. All rights reserved. The photos and diagrams contained in this brochure are only provided for consultation and information purposes.
MANITOU BF SA - Limited company with board of directors - Share capital: 39,668,399 euros - 857 802 508 RCS Nantes