Technical sheet :

MHT 790 ST5

MANITOU
HANDLING YOUR WORLD

Capacities		Metric
Max. capacity		9000 kg
Load center of gravity	c	600 mm
Max. lifting height		6.80 m
Maximum outreach		3.70 m
Weight and dimensions		
Overall length	l1	6.41 m
Unladen weight (with forks)		13420 kg
Ground clearance	m4	0.44 m
Wheelbase	y	2.87 m
Length to face of forks	l2	5.21 m
Overall width	b1	2.47 m
Overall height	h17	2.54 m
Overall cab width	b4	0.93 m
Tilt-up angle	a4	15 °
Tilt-down angle	a5	109 °
External turning radius (over tyres)	Wa1	4.72 m
Forks length / width / section	l / e / s	1200 mm x 200 mm x 60 mm
Wheels		
Standard tires		445/65 R22,5
Number of front wheels / rear wheels		2 / 2
Drive wheels (front / rear)		2 / 2
Steering mode		2 wheel steer, 4 wheel steer, Crab mode
Engine		
Engine brand		Yanmar
Engine norm		Stage V, Tier 4
Engine model		4TN107FHT-5SMUF
Number of cylinders / Capacity of cylinders		4 - 4567 cm³
Engine power (Hp / kW)		143 Hp / 105 kW
Max. torque / Engine rotation		602 Nm@1500 rpm
Engine cooling system		Water cooled
Drawbar pull		10050 daN
Transmission		
Transmission type		Hydrostatic
Number of gears (forward / reverse)		2 / 2
Max. travel speed		35 km/h
Parking brake		Automatic negative parking brake
Service brake		Oil-immersed multi-discs braking on front & rear axles
Gradeability (laden / unladen)		48.10 % / 37.40 %
Hydraulics		
Hydraulic pump type		Variable displacement pump
Hydraulic flow - Pressure		185 l/min - 270 bar
Tank capacities		
Engine oil		13 l
Hydraulic oil		151 l
Fuel		165 l
Diesel Exhaust fluid (AdBlue® type)		20 l
Noise and vibration		
Noise to environment (LwA)		107 dB
Vibration on hands/arms		< 2.50 m/s²
Noise at driving position (LpA) tested following NF EN 12053 norm		75 dB
Miscellaneous		
Cab certification		Cabin ROPS - FOPS level 2
Controls		JSM

MHT 790 ST5 - Dimensional drawing

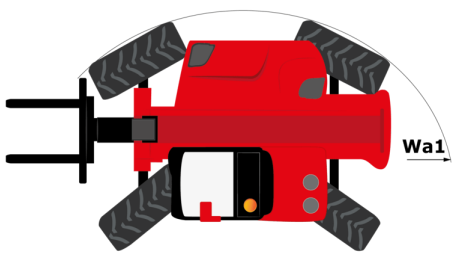

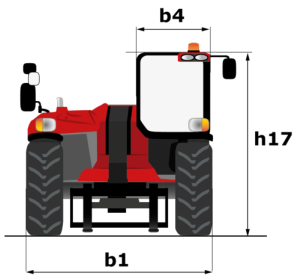

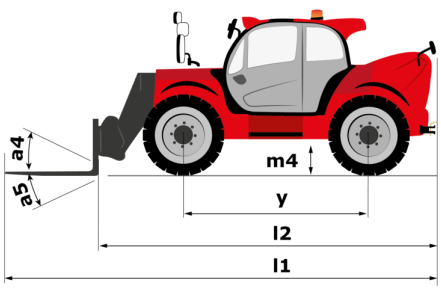

MHT 790 ST5 - Load chart

Machine on tires with forks LC 600 mm Metric

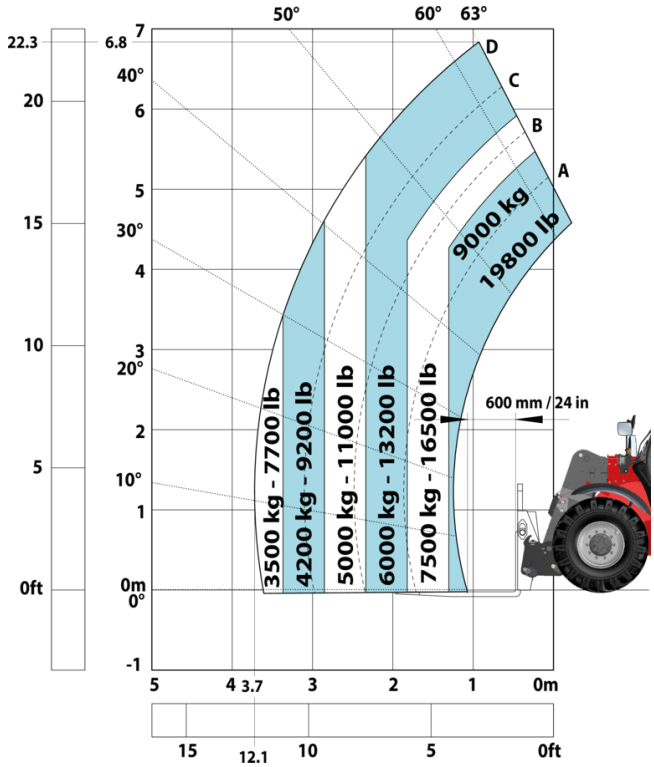

Machine on tires with 3-hook jib 9000 kg (Metric)

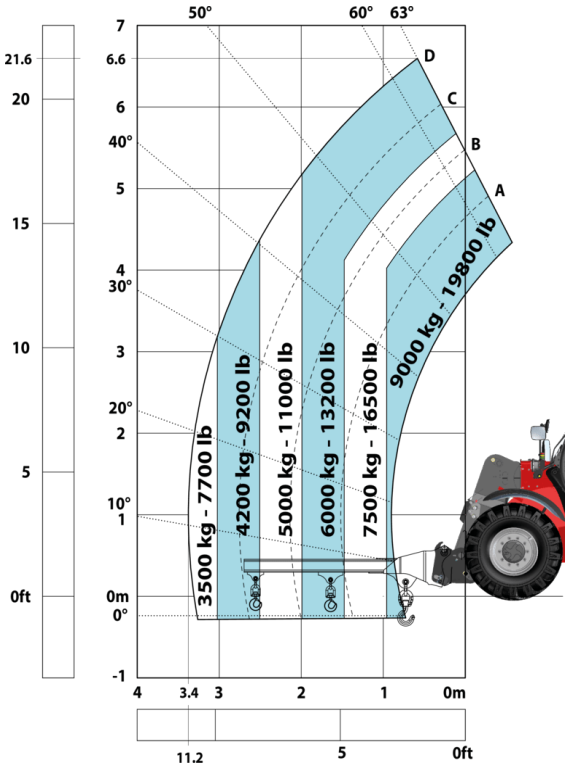

Machine on tires with platform Metric

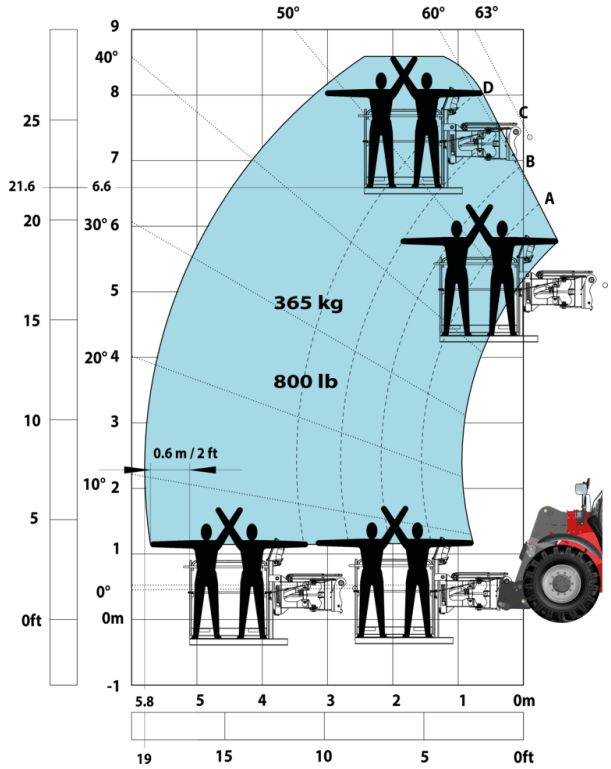

Machine on tires with tire handler TH 49 (Metric)

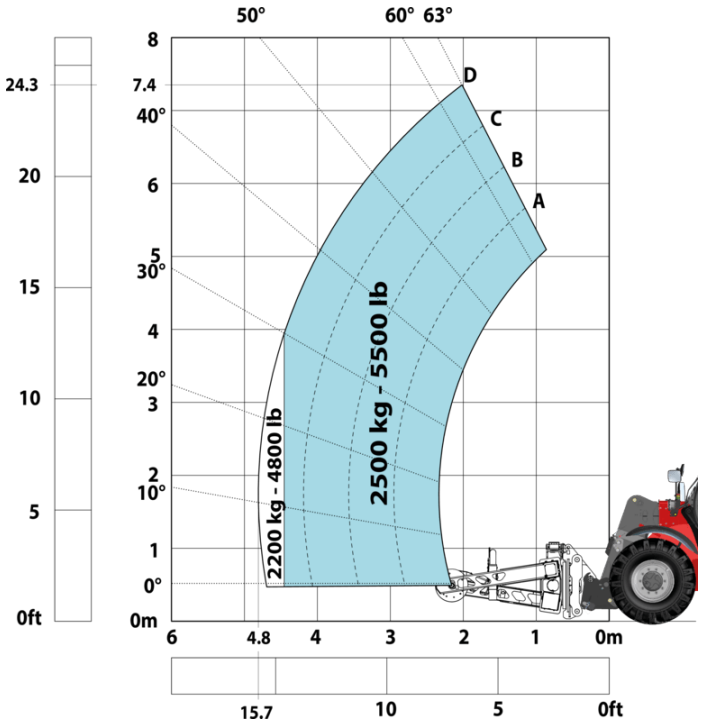

Machine on tires with cylinder handler CH 4 (Metric)

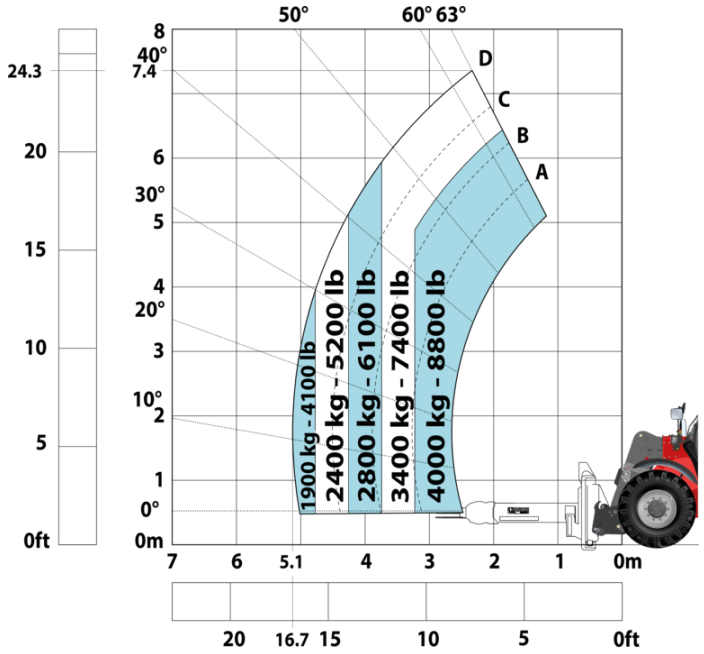

Head Office
B.P. 249 - 430 rue de l'Aubinière
44150 Ancenis Cedex - France
Tel: +33 (0)2 40 09 10 11 - Fax: +33 (0)2 40 09 10 97
www.manitou.com

This publication provides a description of the configuration versions and options for Manitou products, which may differ for equipment. The equipment presented in this brochure may be part of a series, as an option, or it may not be available, depending on the versions. Manitou reserves the right, at any time and without notice, to amend the specifications described and represented. The specifications provided do not bind the manufacturer. For more details, please contact your Manitou agent. This is not a contractually binding document. The presentation of the products is not contractually binding. List of specifications non-exhaustive. The logos as well as the visual identity of the company are owned by Manitou and cannot be used without authorisation. All rights reserved. The photos and diagrams contained in this brochure are only provided for consultation and information purposes.
MANITOU BF SA - Limited company with board of directors - Share capital: 39,668,399 euros - 857 802 508 RCS Nantes