Technical sheet :

MHT 790 MINING ST5

MANITOU
HANDLING YOUR WORLD

Capacities		Metric
Max. capacity		9000 kg
Load center of gravity	c	600 mm
Max. lifting height		6.80 m
Maximum outreach		3.70 m
Weight and dimensions		
Overall length	l1	6.41 m
Unladen weight (with forks)		13160 kg
Ground clearance	m4	0.44 m
Wheelbase	y	2.87 m
Length to face of forks	l2	5.21 m
Overall width	b1	2.47 m
Overall height	h17	2.50 m
Overall cab width	b4	0.93 m
Tilt-up angle	a4	12 °
Tilt-down angle	a5	125 °
External turning radius (over tyres)	Wa1	4.89 m
Forks length / width / section	l / e / s	1200 mm x 200 mm x 60 mm
Wheels		
Standard tires		445/65 R22,5
Number of front wheels / rear wheels		2 / 2
Steering wheels (front / rear)		2 / 2
Drive wheels (front / rear)		2 / 2
Steering mode		2 wheel steer, 4 wheel steer, Crab mode
Engine		
Engine brand		Yanmar
Engine norm		Stage V, Tier 4
Engine model		4TN107HT-5SMUF
Number of cylinders / Capacity of cylinders		4 - 4567 cm³
Engine power (Hp / kW)		143 Hp / 105 kW
Max. torque / Engine rotation		602 Nm@1500 rpm
Engine cooling system		Water
Battery voltage		12 V
Drawbar pull		10905 daN
Transmission		
Transmission type		Hydrostatic
Number of gears (forward / reverse)		2 / 2
Max. travel speed		35 km/h
Parking brake		Automatic negative parking brake
Service brake		Oil-immersed multi-discs braking on front & rear axles
Hydraulics		
Hydraulic pump type		Variable displacement pump
Hydraulic flow - Pressure		185 l/min - 270 bar
Tank capacities		
Engine oil		13 l
Hydraulic oil		151 l
Fuel		165 l
Noise and vibration		
Noise to environment (LwA)		103 dB
Vibration on hands/arms		< 2.50 m/s²
Miscellaneous		
Safety / Cab certification		Standard EN 15000 - Cabin ROPS - FOPS level 2
Controls		JSM

MHT 790 Mining ST5 - Dimensional drawing

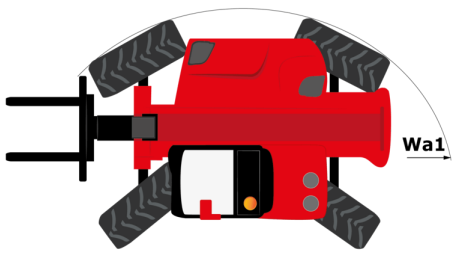

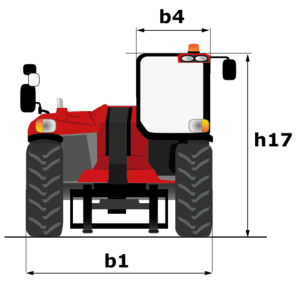

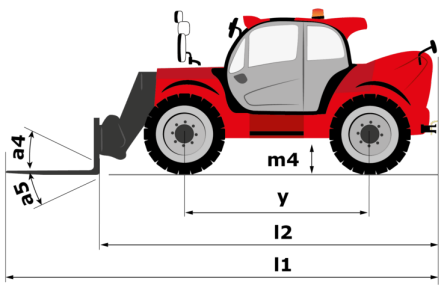

MHT 790 Mining ST5 - Load chart

Machine on tires with forks LC 600 mm Metric

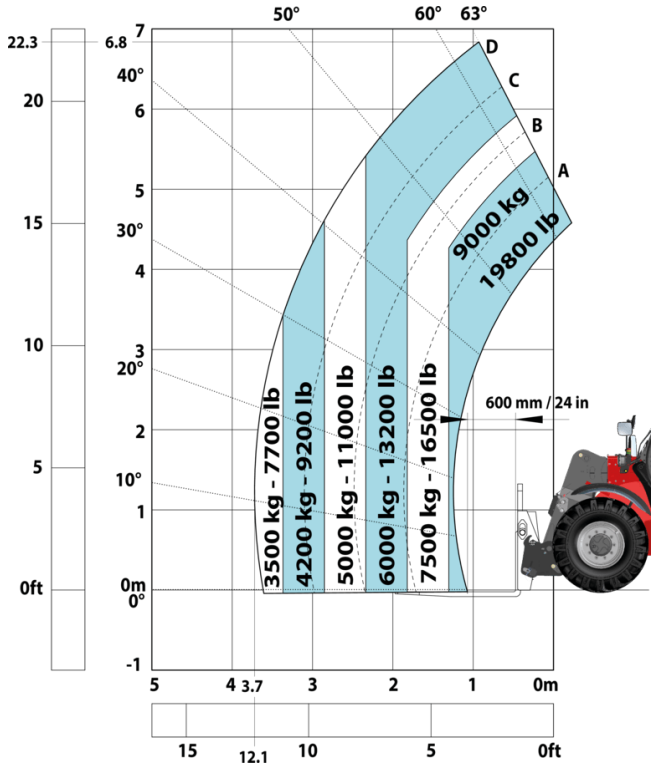

Machine on tires with winch 9000 kg (Metric)

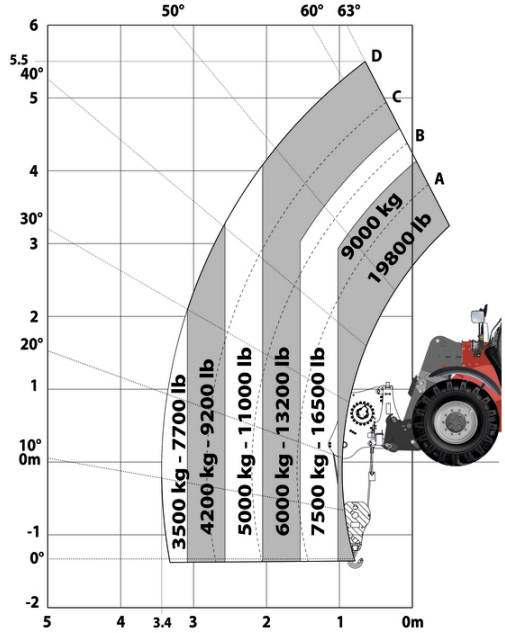

Machine on tires with 3-hook jib 9000 kg (Metric)

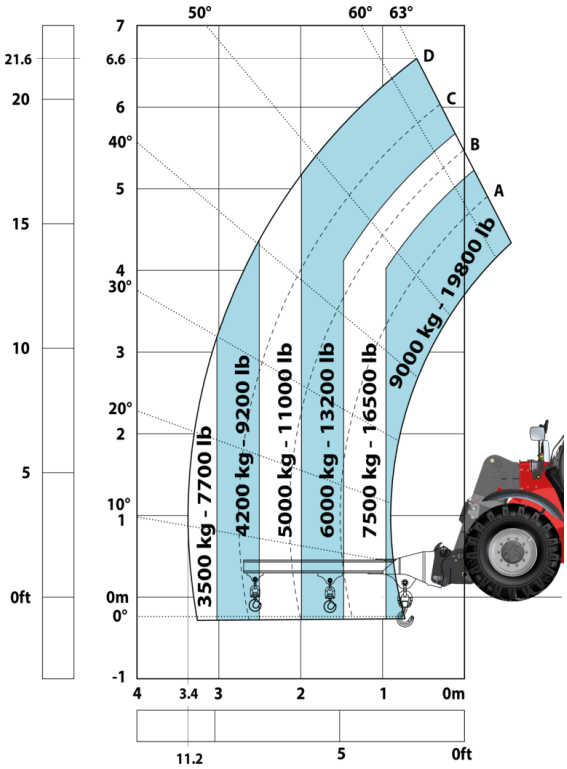

Machine on tires with platform Metric

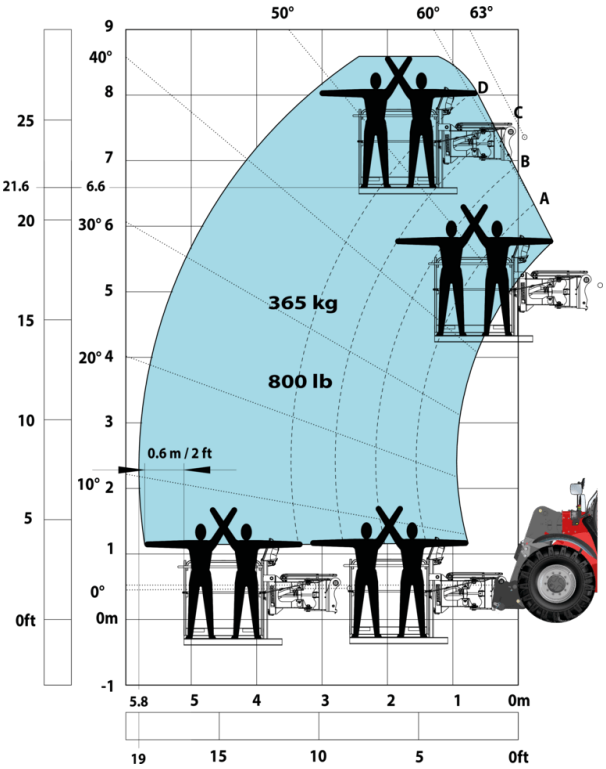

Machine on tires with underground mining platform (Metric)

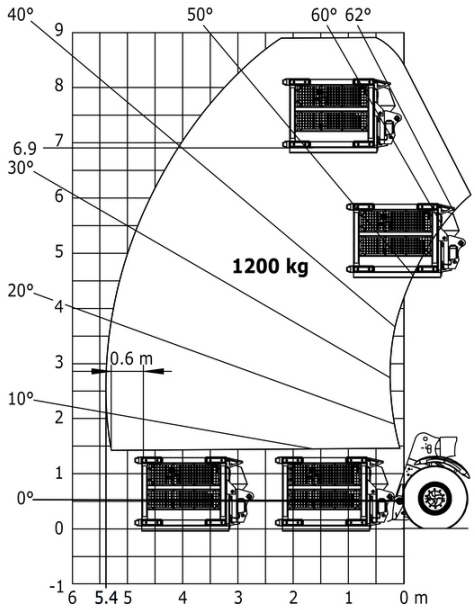

Machine on tires with tire handler TH 35 (Metric)

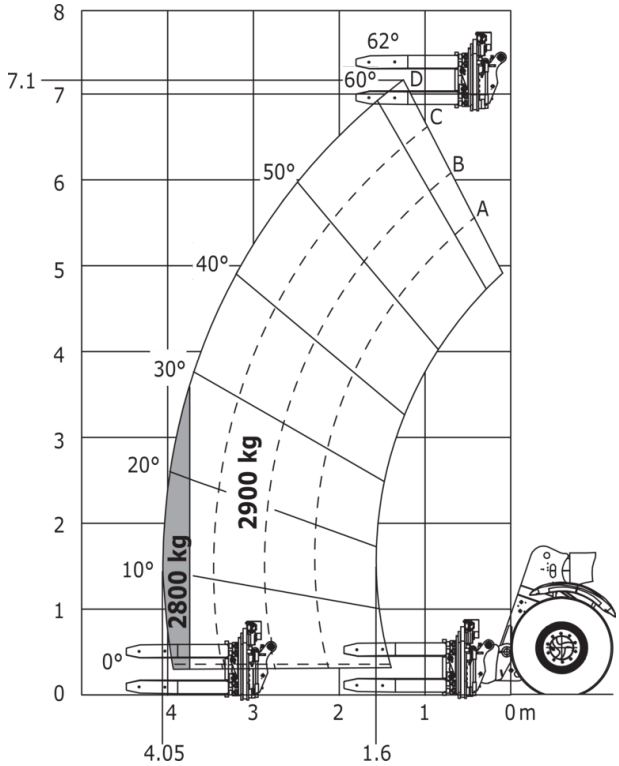

Machine on tires with tire handler TH 49 (Metric)

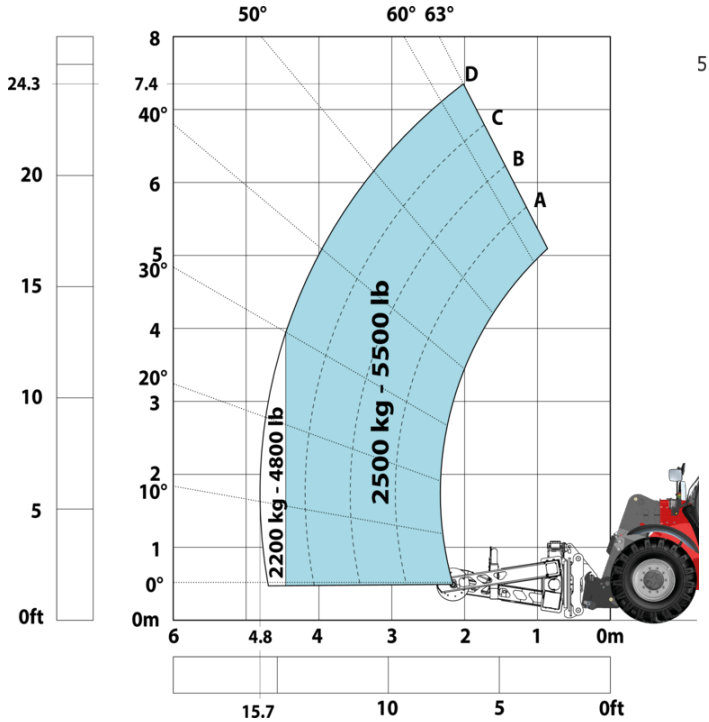

Machine on tires with tire handler TH 51 (Metric)

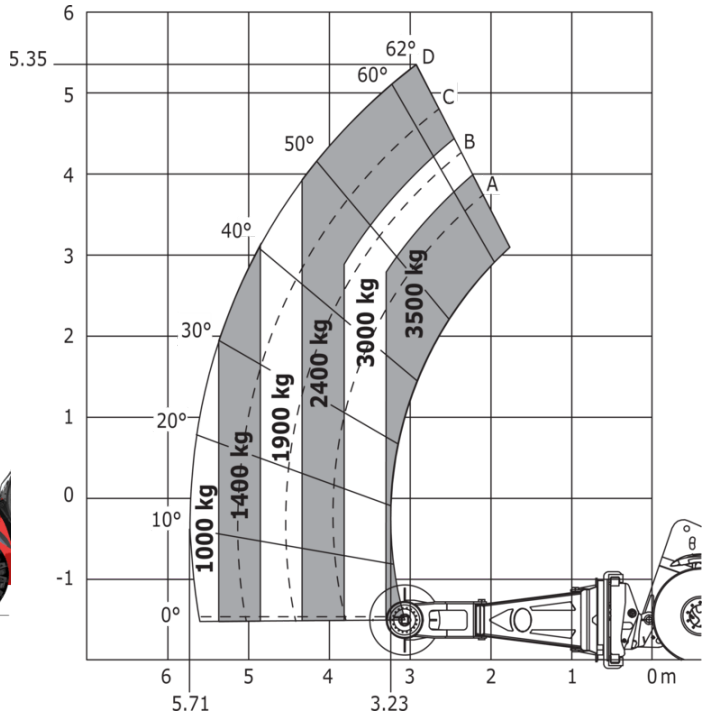

Machine on tires with cylinder handler CH 4 (Metric)

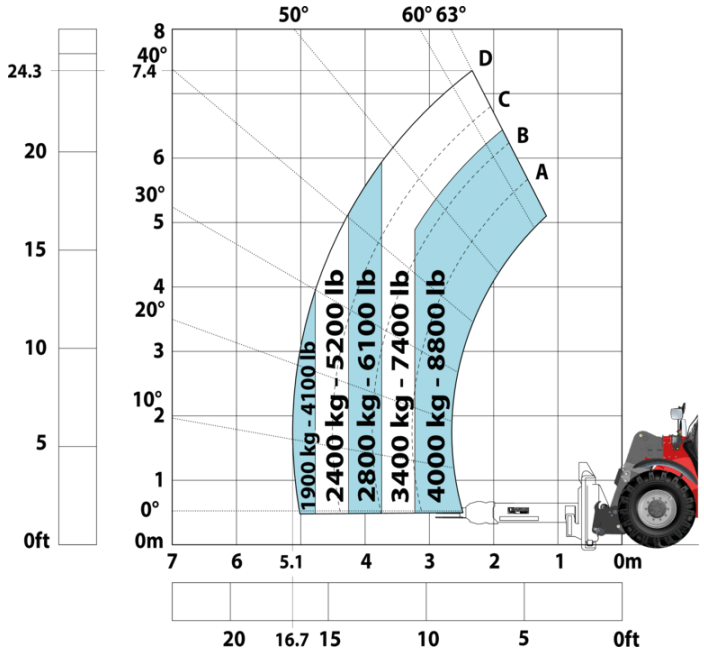

Mining Specifications

	MHT 790 Mining ST5
Lifting function	
Camera in boom head with screen in cab	O
Clamp predisposition (controls from cabin)	S
Comfort Ride Control (CRC) boom suspension	O
Working platform predisposition with remote control	S
Lighting	
Brake Lights ON When Park Brake ON	S
Flat Led Rotating Beacon	S
LED Flashing Lights On Cabin (Marker Lights)	S
LED directional lights	S
LED work lights - On boom head (Telescopic part)	S
LED working lights on cab (x4 : 2 front + 2 rear)	S
Motorization/Power	
Hydraulic hose sleeve burst protection	O
Metal cyclonic prefilter	S
Radiator safety cap	S
Operator station	
Roof and Windshield Guard	S
Other options	
Lockable battery + starter Isolators + Jump Start Receptacle	S
Stainless steel tool box	S
Pneumatics	
Steel mudguards	O
Secondary functions	
Automatic greasing system (AGS) - Chassis + boom	O
Fast diesel filling system	O
Security	
"Guardian Angel" System	S
360° visibility safety system	S
Air intake shut-off valve	O
Boom cylinder lock	S
Emergency steering	S
Emergency stop: 1 in cab, 2 on external	S
Engine compartment fire prevention kit	O
Extinguisher brackets (x3)	S
Fire suppression system	O
High visibility reflective strips	S
Loose wheel nut indicators	S
Marking - Warning & Danger decals	S
Mining protection grids: right, left and back windows	S
Rear bumper	O
Resettable fuses - MHT's	S
Right side bumper	O
SAHR negative brakes on front & rear axles	S
Steel Protection Guards on all working and road lights	S
System with attachments recognition (E-reco)	S
Wheel chocks	S

Equipment

Standard
"Guardian Angel" System
360° visibility safety system
Boom cylinder lock
Brake Lights ON When Park Brake ON
Clamp predisposition (controls from cabin)
Emergency steering
Emergency stop: 1 in cab, 2 on external
Extinguisher brackets (x3)
Flat Led Rotating Beacon
High visibility reflective strips
LED Flashing Lights On Cabin (Marker Lights)
LED directional lights
LED work lights - On boom head (Telescopic part)
LED working lights on cab (x4 : 2 front + 2 rear)
Lockable battery + starter Isolators + Jump Start Receptacle
Loose wheel nut indicators
Marking - Warning & Danger decals
Metal cyclonic prefilter
Mining protection grids: right, left and back windows
Radiator safety cap
Resettable fuses - MHT's
Roof and Windshield Guard
SAHR negative brakes on front & rear axles
Stainless steel tool box
Steel Protection Guards on all working and road lights
System with attachments recognition (E-reco)
Wheel chocks
Working platform predisposition with remote control

Optional
Air intake shut-off valve
Automatic greasing system (AGS) - Chassis + boom
Camera in boom head with screen in cab
Comfort Ride Control (CRC) boom suspension
Engine compartment fire prevention kit
Fast diesel filling system
Fire suppression system
Hydraulic hose sleeve burst protection
Rear bumper
Right side bumper
Steel mudguards

Head Office
B.P. 249 - 430 rue de l'Aubinière
44150 Ancenis Cedex - France
Tel: +33 (0)2 40 09 10 11 - Fax: +33 (0)2 40 09 10 97
www.manitou.com

This publication provides a description of the configuration versions and options for Manitou products, which may differ for equipment. The equipment presented in this brochure may be part of a series, as an option, or it may not be available, depending on the versions. Manitou reserves the right, at any time and without notice, to amend the specifications described and represented. The specifications provided do not bind the manufacturer. For more details, please contact your Manitou agent. This is not a contractually binding document. The presentation of the products is not contractually binding. List of specifications non-exhaustive. The logos as well as the visual identity of the company are owned by Manitou and cannot be used without authorisation. All rights reserved. The photos and diagrams contained in this brochure are only provided for consultation and information purposes.
MANITOU BF SA - Limited company with board of directors - Share capital: 39,668,399 euros - 857 802 508 RCS Nantes