Technical sheet :

# MHT 12330

MANITOU
HANDLING YOUR WORLD

| Capacities | | Metric |
|---|---|---|
| Max. capacity | | 33000 kg |
| Load center of gravity | c | 1200 mm |
| Max. lifting height | | 11.92 m |
| Maximum outreach | | 6.60 m |
| **Weight and dimensions** | | |
| Overall length | l1 | 10.77 m |
| Unladen weight (with forks) | | 49000 kg |
| Ground clearance | m4 | 0.59 m |
| Wheelbase | y | 4.90 m |
| Length to face of forks | l2 | 8.37 m |
| Overall width | b1 | 2.98 m |
| Overall height | h17 | 3.60 m |
| Overall cab width | b4 | 0.97 m |
| Tilt-up angle | a4 | 10 ° |
| Tilt-down angle | a5 | 100 ° |
| External turning radius (over tyres) | Wa1 | 7.42 m |
| Outer turning radius (with forks) | b15 | 9.33 m |
| Forks length / width / section | l / e / s | 2400 mm x 110 mm x 250 mm |
| Frame leveling corrector | a9 | 6 ° |
| **Wheels** | | |
| Standard tires | | 21.00 R35 |
| Number of front wheels / rear wheels | | 2 / 2 |
| Steering wheels (front / rear) | | 4 / 4 |
| Drive wheels (front / rear) | | 2 / 2 |
| Steering mode | | 2 wheel steer, 4 wheel steer, Crab mode |
| **Engine** | | |
| Engine brand | | Deutz |
| Engine norm | | Stage V, Tier 4 final |
| Engine model | | TCD 6.1 L6 |
| Number of cylinders / Capacity of cylinders | | 6 - 6100 cm³ |
| Engine power (Hp / kW) | | 245 Hp / 180 kW |
| Max. torque / Engine rotation | | 1000 Nm@1450 rpm |
| Engine cooling system | | Water |
| Number of batteries | | 2 |
| Battery voltage | | 12 V |
| Drawbar pull | | 28400 daN |
| **Transmission** | | |
| Transmission type | | Hydrostatic with Powershift |
| Number of gears (forward / reverse) | | 3 / 3 |
| Max. travel speed | | 25 km/h |
| Parking brake | | Automatic negative parking brake |
| Service brake | | Oil-immersed multi-discs braking on front & rear axles |
| Gradeability (laden) | | 36 % |
| **Hydraulics** | | |
| Hydraulic pump type | | Variable displacement pump |
| Hydraulic flow - Pressure | | 310 l/min - 350 bar |
| **Tank capacities** | | |
| Engine oil | | 21 l |
| Hydraulic oil | | 570 l |
| Fuel | | 600 l |
| Diesel Exhaust fluid (AdBlue® type) | | 32 l |
| **Noise and vibration** | | |
| Noise to environment (LwA) | | 110 dB |
| Vibration on hands/arms | | < 2.50 m/s² |
| **Miscellaneous** | | |
| Cab certification | | Cabin ROPS - FOPS level 2 |
| Controls | | JSM |
| Attachment recognition system (E-Reco) | | Standard |

## MHT 12330 - Dimensional drawing

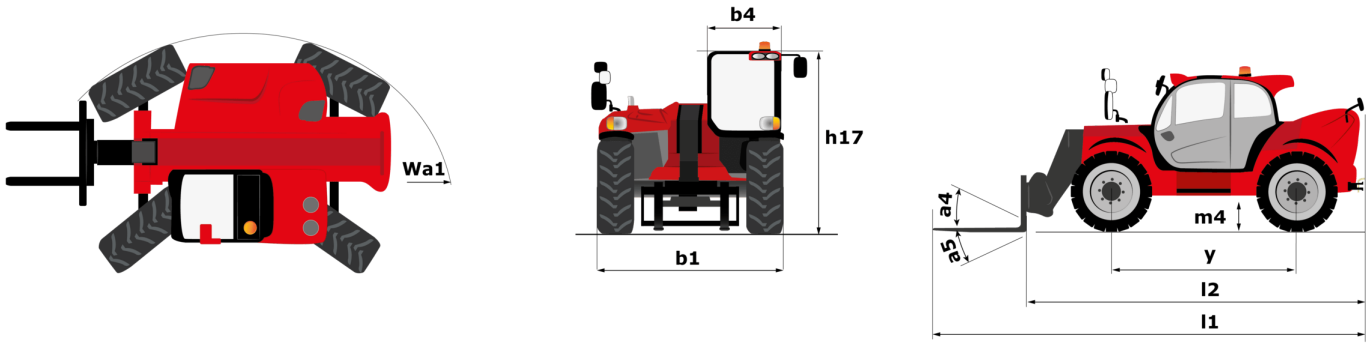

# MHT 12330 - Load chart

## Machine on tires with forks LC 1200 mm Metric

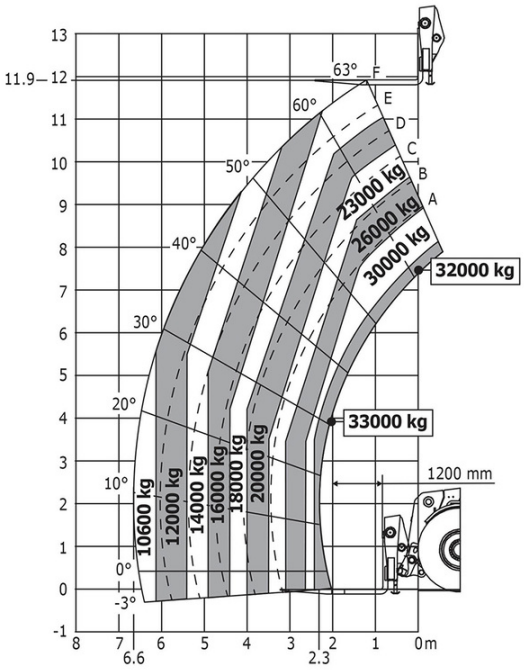


## Machine on tires with hook 36000 kg (Metric)

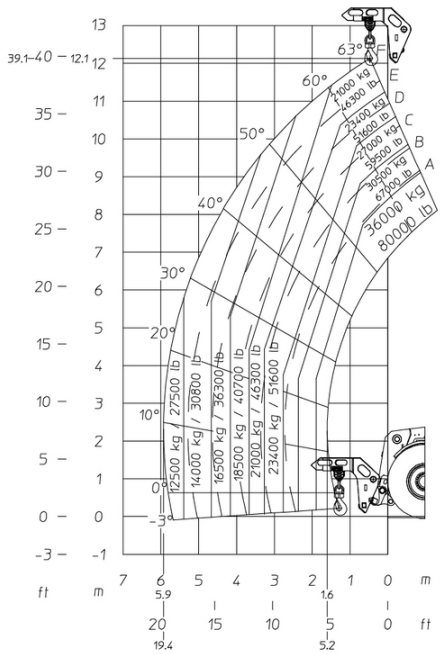


## Machine on tires with 3-hook jib 36000 kg (Metric)

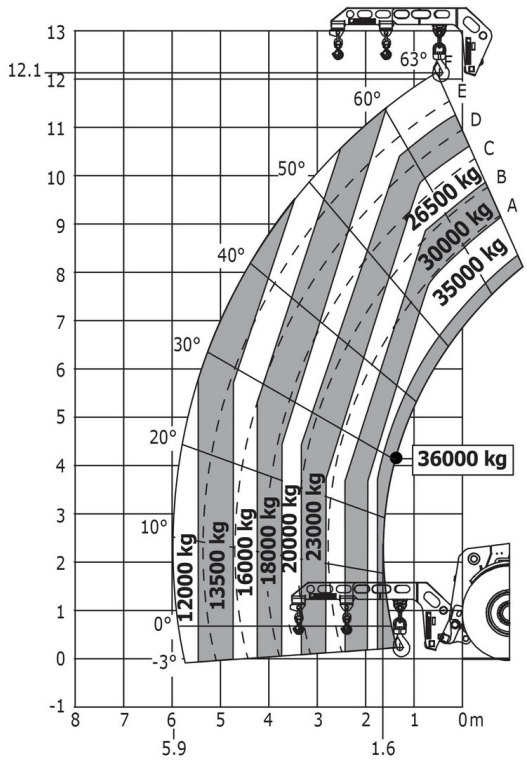

MANITOU
HANDLING YOUR WORLD

**Head Office**
B.P. 249 - 430 rue de l'Aubinière
44150 Ancenis Cedex - France
Tel: +33 (0)2 40 09 10 11 - Fax: +33 (0)2 40 09 10 97
www.manitou.com

This publication provides a description of the configuration versions and options for Manitou products, which may differ for equipment. The equipment presented in this brochure may be part of a series, as an option, or it may not be available, depending on the versions. Manitou reserves the right, at any time and without notice, to amend the specifications described and represented. The specifications provided do not bind the manufacturer. For more details, please contact your Manitou agent. This is not a contractually binding document. The presentation of the products is not contractually binding. List of specifications non-exhaustive. The logos as well as the visual identity of the company are owned by Manitou and cannot be used without authorisation. All rights reserved. The photos and diagrams contained in this brochure are only provided for consultation and information purposes.
MANITOU BF SA - Limited company with board of directors - Share capital: 39,668,399 euros - 857 802 508 RCS Nantes