Technical sheet :

MHT 11250 MINING ST5

MANITOU
HANDLING YOUR WORLD

Capacities		Metric
Max. capacity		24999 kg
Load center of gravity	c	900 mm
Max. lifting height		10.60 m
Maximum outreach		6 m
Weight and dimensions		
Overall length	l1	8.92 m
Unladen weight (with forks)		31610 kg
Ground clearance	m4	0.47 m
Wheelbase	y	4.10 m
Length to face of forks	l2	7.12 m
Overall width	b1	2.84 m
Overall height	h17	3.03 m
Overall cab width	b4	0.95 m
Tilt-up angle	a4	12 °
Tilt-down angle	a5	105 °
External turning radius (over tyres)	Wa1	5.50 m
Forks length / width / section	l / e / s	1800 mm x 220 mm x 100 mm
Frame leveling corrector	a9	10 °
Wheels		
Standard tires		18.00 R25
Number of front wheels / rear wheels		2 / 2
Drive wheels (front / rear)		2 / 2
Steering mode		2 wheel steer, 4 wheel steer, Crab mode
Engine		
Engine brand		Yanmar
Engine norm		Stage V, Tier 4
Engine model		4TN107TT-6SMU2
Number of cylinders / Capacity of cylinders		4 - 4567 cm³
Engine power (Hp / kW)		211 Hp / 155 kW
Max. torque / Engine rotation		805 Nm@1500 rpm
Engine cooling system		Water
Number of batteries		2
Battery voltage		12 V
Transmission		
Transmission type		Hydrostatic
Number of gears (forward / reverse)		2 / 2
Max. travel speed		25 km/h
Parking brake		Automatic negative parking brake
Service brake		Oil-immersed multi-discs braking on front & rear axles
Gradeability (laden / unladen)		57.70 % / 31.50 %
Hydraulics		
Hydraulic pump type		Variable displacement pump
Hydraulic flow - Pressure		275 l/min - 350 bar
Tank capacities		
Engine oil		13 l
Hydraulic oil		290 l
Fuel		315 l
Miscellaneous		
Cab certification		Cabin ROPS - FOPS level 2
Controls		JSM

MHT 11250 Mining ST5 - Dimensional drawing

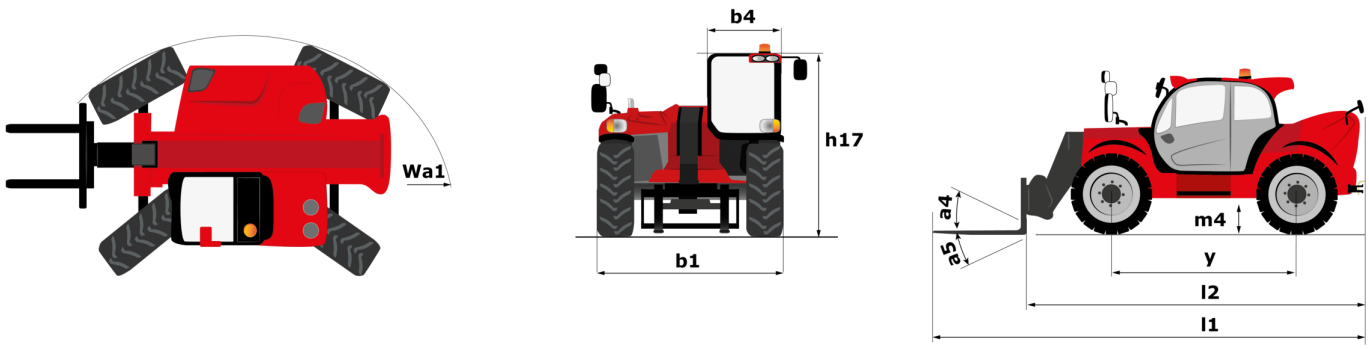

MHT 11250 Mining ST5 - Load chart

Machine on tires with forks LC 900 mm Metric

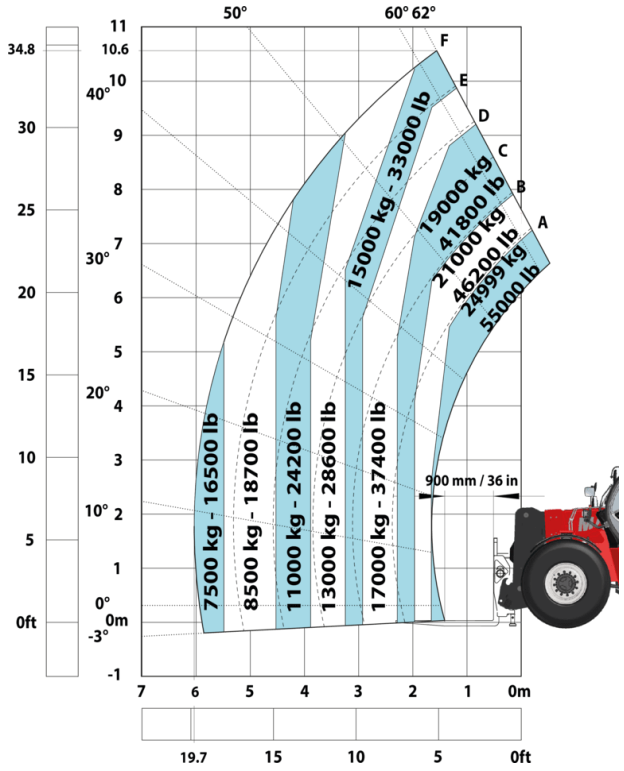

Machine on tires with forks LC 1200 mm Metric

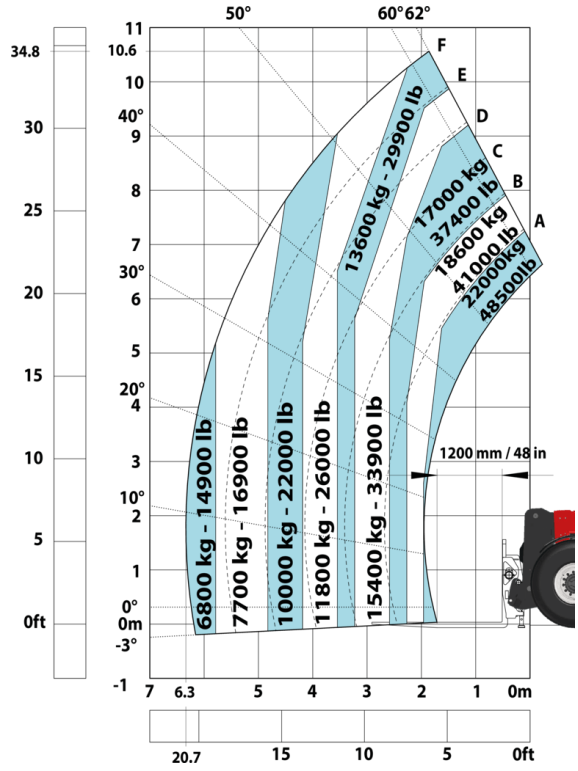

Machine on tires with winch 25000 kg (Metric)

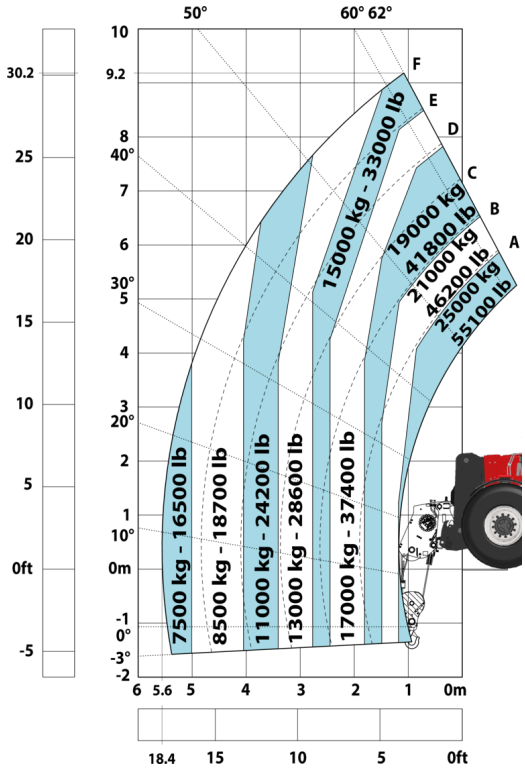

Machine on tires with 3-hook jib 25000 kg (Metric)

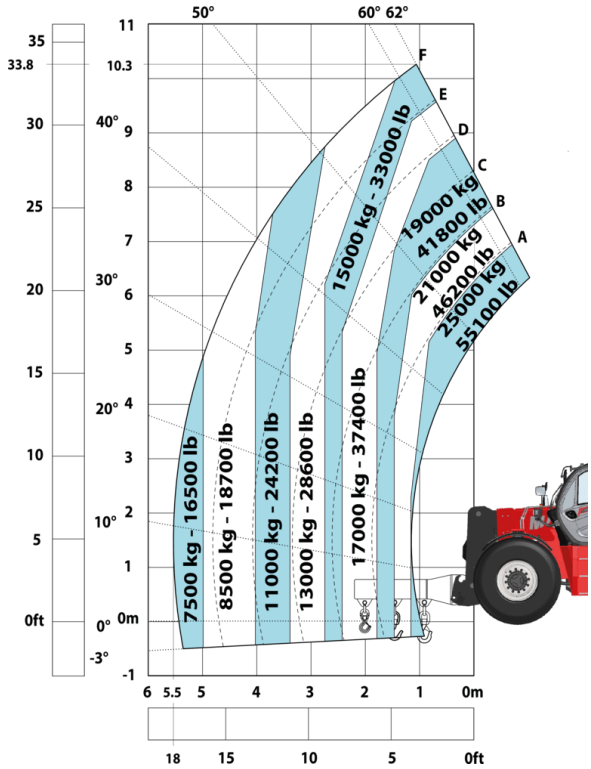

Machine on tires with underground mining platform (Metric)

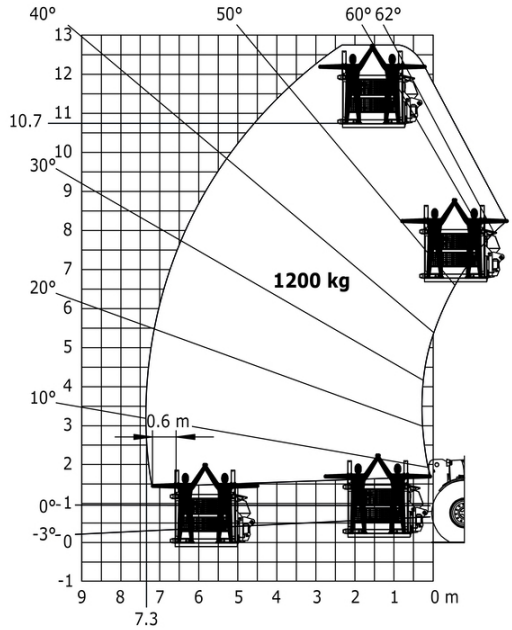

Machine on tires with tire handler TH 63 (Metric)

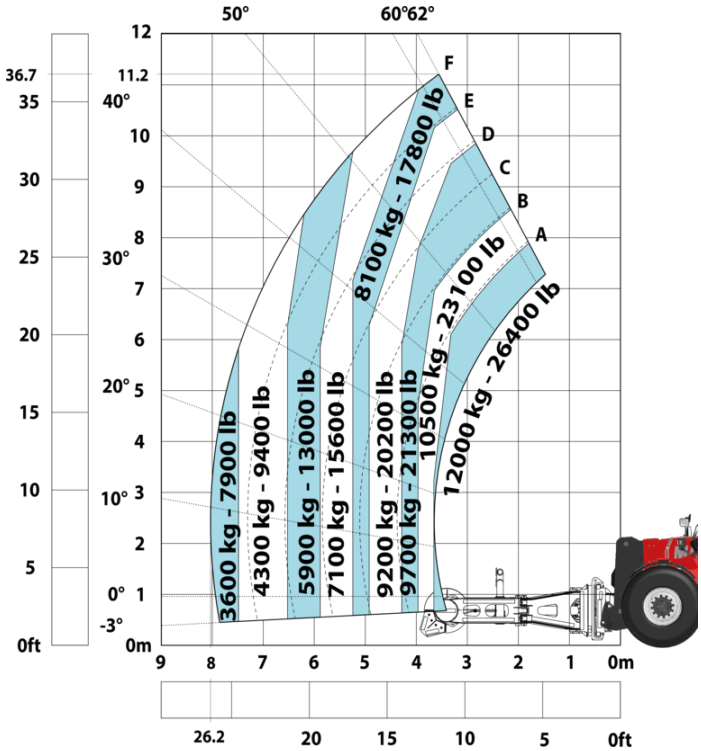

Machine on tires with cylinder handler CH 10 (Metric)

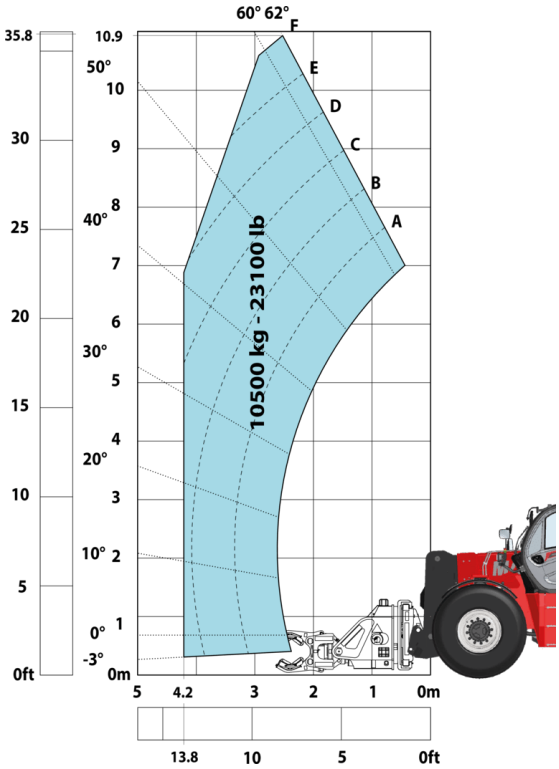

Mining Specifications

	MHT 11250 Mining ST5
Lifting function	
Camera in boom head with screen in cab	O
Clamp predisposition (controls from cabin)	S
Working platform predisposition with remote control	S
Lighting	
Brake Lights ON When Park Brake ON	S
Flat Led Rotating Beacon	S
LED Flashing Lights On Cabin (Marker Lights)	S
LED tramming lights	S
LED work lights - On the top of the boom (fixed part) (x2)	S
LED working lights on cab (x4 : 2 front + 2 rear)	S
Motorization/Power	
Hydraulic hose sleeve burst protection	S
Radiator safety cap	S
Operator station	
Cabin first step at 400 mm	S
Roof and Windshield Guard	S
Other options	
Battery + Starter Isolators + Jump Start Receptacle	S
Stainless steel tool box	S
Pneumatics	
Steel mudguards	O
Secondary functions	
Automatic greasing system (AGS) - Chassis + boom	O
Fast fuel filling system	O
Security	
"Guardian Angel" System Level 1	S
360° visibility safety system	S
Boom cylinder lock	S
Electromagnetic braking system TELMA	O
Emergency steering	S
Emergency stop by safety valve	O
Emergency stop: 1 in cab, 2 on external	S
Engine compartment fire prevention kit	O
Extinguisher brackets (x3)	S
Fire suppression system	O
Fuse board protection - MHT's	S
High visibility reflective strips	S
Loose wheel nut indicators	S
Marking - Warning & Danger decals	S
Mining protection grids: right, left and back windows	O
Negative brakes on front & rear axles	S
Rear bumper	O
Right side bumper	O
Steel Protection Guards on all working and road lights	S
System with attachments recognition (E-reco)	S
Wheel chocks	S

Equipment

Standard
"Guardian Angel" System Level 1
360° visibility safety system
Battery + Starter Isolators + Jump Start Receptacle
Boom cylinder lock
Brake Lights ON When Park Brake ON
Cabin first step at 400 mm
Clamp predisposition (controls from cabin)
Emergency steering
Emergency stop: 1 in cab, 2 on external
Extinguisher brackets (x3)
Flat Led Rotating Beacon
Fuse board protection - MHT's
High visibility reflective strips
Hydraulic hose sleeve burst protection
LED Flashing Lights On Cabin (Marker Lights)
LED tramming lights
LED work lights - On the top of the boom (fixed part) (x2)
LED working lights on cab (x4 : 2 front + 2 rear)
Loose wheel nut indicators
Marking - Warning & Danger decals
Negative brakes on front & rear axles
Radiator safety cap
Roof and Windshield Guard
Stainless steel tool box
Steel Protection Guards on all working and road lights
System with attachments recognition (E-reco)
Wheel chocks
Working platform predisposition with remote control

Optional
Automatic greasing system (AGS) - Chassis + boom
Camera in boom head with screen in cab
Electromagnetic braking system TELMA
Emergency stop by safety valve
Engine compartment fire prevention kit
Fast fuel filling system
Fire suppression system
Mining protection grids: right, left and back windows
Rear bumper
Right side bumper
Steel mudguards

Head Office
B.P. 249 - 430 rue de l'Aubinière
44150 Ancenis Cedex - France
Tel: +33 (0)2 40 09 10 11 - Fax: +33 (0)2 40 09 10 97
www.manitou.com

This publication provides a description of the configuration versions and options for Manitou products, which may differ for equipment. The equipment presented in this brochure may be part of a series, as an option, or it may not be available, depending on the versions. Manitou reserves the right, at any time and without notice, to amend the specifications described and represented. The specifications provided do not bind the manufacturer. For more details, please contact your Manitou agent. This is not a contractually binding document. The presentation of the products is not contractually binding. List of specifications non-exhaustive. The logos as well as the visual identity of the company are owned by Manitou and cannot be used without authorisation. All rights reserved. The photos and diagrams contained in this brochure are only provided for consultation and information purposes.
MANITOU BF SA - Limited company with board of directors - Share capital: 39,668,399 euros - 857 802 508 RCS Nantes