Technical sheet :

ME 430 LIFT

OXYGEN

MANITOU
HANDLING YOUR WORLD

	Technical characteristics		Metric
1.1	Manufacturer		Manitou
1.2	Model Name		ME 430 LIFT
1.3	Power source		Electrical - Lithium
1.4	Operator type		Seated
1.5	Max. capacity	Q	3000 kg
1.6	Load center of gravity	c	500 mm
1.8	Load distance, centre of drive axle to fork	x	463.50 mm
1.9	Wheelbase	y	1650 mm
	Standard mast reference of the machine		FVD 30
	Weight		
2.1	Service weight		4610 kg
2.2	Weight on front axle (laden) / rear axle (laden)		6610 kg / 1000 kg
2.3	Weight on front axle (Unladen) / rear axle (Unladen)		1960 kg / 2650 kg
	Wheels		
3.1	Tires type		Solid tires
3.2	Dimensions of front wheels		23x10-12-18PR
3.3	Dimensions of rear wheels		18x7-8-16PR
3.5	Number of front wheels / rear wheels		2 / 2
3.5.2	Number of drive wheels		2
3.6	Front wheel gauge	b10	1044 mm
3.7	Rear wheel gauge	b11	960 mm
	Dimensions		
4.7	Height of overhead guard (cabin)	h6	2186 mm
4.8	Seat height/stand height	h7	1155 mm
4.12	Height of towing bar (coupling height)	h10	440 mm
4.19	Overall length	l1	3522.50 mm
4.20	Length to face of forks	l2	2452.50 mm
4.21	Overall width	b1	1298 mm
4.22	Forks section / width / length	s / e / l	45 mm x 122 mm x 1070 mm
4.23	Fork carriage ISO 2328 (class/form) A/B		3A
4.24	Fork carriage width	b3	1100 m
4.31	Ground clearance below mast	m1	127 mm
4.32	Ground clearance at centre of wheelbase	m2	115 mm
4.33	Aisle Width for pallets 1000 x 1200 crossways	Ast	3854 mm
4.34	Aisle width for 800 x 1200 pallet lengthways	Ast	4053.50 mm
4.35	Turning radius	Wa	2190 mm
	Performances		
5.1	Travel speed (laden / unladen)		19 km/h-20 km/h
5.2	Lifting speed (laden / unladen)		0.45 m/s-0.55 m/s
5.3	Lowering speed (laden / unladen)		0.50 m/s-0.53 m/s
5.5	Drawbar pull (Laden / Unladen)		8500 daN / 9500 daN
5.7	Gradeability (laden / unladen)		13 % / 24 %
5.10	Service brake		Hydraulic
	Engine		
6.1	Drive motor rating S2 60 min		20 kW
6.2	Lift motor rating at S3 15%		26 kW
6.3	Battery according to DIN 43531/35/36 A, B, C		Lithium
6.4	Battery voltage / capacity		76.80 V / 460 Ah
6.5	Battery weight (+/- 5%)		310 kg
6.6	Energy consumption according to VDI cycle (kWh/h)		8 kWh/h
	Miscellaneous		
8.2	Working hydraulic pressure for attachments		160 bar
8.3	Oil flow rate for attachments		25 l/min
8.4	Sound level at the driver's ear according to DIN 12 053		70 dB

ME 430 LIFT - Dimensional drawing

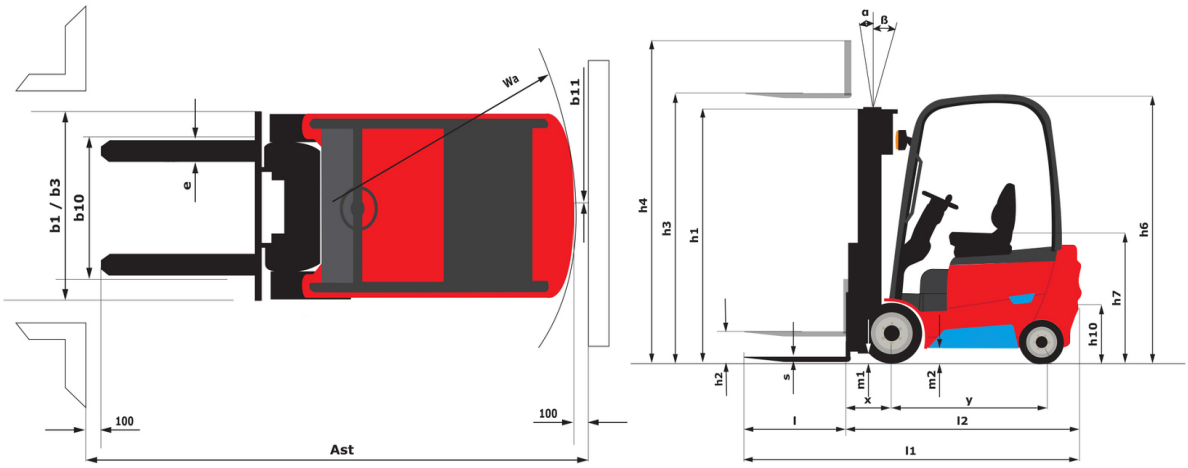

Characteristics of masts and residual capacities

Full Visibility Duplex (FVD)		FVD 30	FVD 33	FVD 37	FVD 40	FVD 45
α - Mast/fork carriage tilt, forward	°	6	6	6	6	6
β - Mast/fork carriage tilt, backward	°	12	12	12	12	6
h1 - Mast lowered height	mm	2007	2157	2407	2607	2857
h2 - Mast free lift	mm	145	145	145	145	145
h3 - Mast lifting height	mm	3000	3300	3700	4000	4500
h4 - Mast extended height	mm	4142	4442	4842	5142	5642
Residual capacity at max height	kg	3000	3000	3000	3000	3000
Residual capacity with integrated side shift at max heigth	kg	2900	2900	2900	2900	2900

Free Lift Triplex (FLT)		FLT 40	FLT 45	FLT 48	FLT 50	FLT 55	FLT 60	FLT 65
α - Mast/fork carriage tilt, forward	°	6	6	6	6	3	3	3
β - Mast/fork carriage tilt, backward	°	6	12	12	6	12	6	6
h1 - Mast lowered height	mm	2007	2157	2307	2407	2607	2857	3057
h2 - Mast free lift	mm	865	1015	1165	1265	1465	1715	1915
h3 - Mast lifting height	mm	4000	4500	4800	5000	5500	6000	6500
h4 - Mast extended height	mm	5142	5642	5942	6142	6642	7142	7642
Residual capacity at max height	kg	3000	3000	2900	2850	2670	2350	2000
Residual capacity with integrated side shift at max heigth	kg	2900	2900	2800	2750	2570	2250	1900

Equipment

Standard
Audio warning on reverse movements
Battery - 35.3kWh - Lithium-ion
Electric parking brake
External charger - 10kW AC - Lithium-ion - Three-phase
LED front right and left working lights (x2)
Mechanical suspension PVC seat - Grammer MSG65
Overhead guard - With roof window (Tempered glass)
Panoramic interior rear view mirror
Rear working light

Optional
Battery - 46.7kWh - Lithium-ion
Charger - 20kW - 32A - 380V - Lithium-ion
Closed cab
External charger - 8kW AC - Lithium-ion - Three-phase
Open cab

Head Office
B.P. 249 - 430 rue de l'Aubinière
44150 Ancenis Cedex - France
Tel: +33 (0)2 40 09 10 11 - Fax: +33 (0)2 40 09 10 97
www.manitou.com

This publication provides a description of the configuration versions and options for Manitou products, which may differ for equipment. The equipment presented in this brochure may be part of a series, as an option, or it may not be available, depending on the versions. Manitou reserves the right, at any time and without notice, to amend the specifications described and represented. The specifications provided do not bind the manufacturer. For more details, please contact your Manitou agent. This is not a contractually binding document. The presentation of the products is not contractually binding. List of specifications non-exhaustive. The logos as well as the visual identity of the company are owned by Manitou and cannot be used without authorisation. All rights reserved. The photos and diagrams contained in this brochure are only provided for consultation and information purposes.
MANITOU BF SA - Limited company with board of directors - Share capital: 39,668,399 euros - 857 802 508 RCS Nantes