Technical sheet :

# ME 316 LIFT

OXYGEN

MANITOU
HANDLING YOUR WORLD

| | Technical characteristics | | Metric |
|---|---|---|---|
| 1.1 | Manufacturer | | Manitou |
| 1.2 | Model Name | | ME 316 LIFT |
| 1.3 | Power source | | Electrical - Lithium |
| 1.4 | Operator type | | Seated |
| 1.5 | Max. capacity | Q | 1600 kg |
| 1.6 | Load center of gravity | c | 500 mm |
| 1.8 | Load distance, centre of drive axle to fork | x | 359.50 mm |
| 1.9 | Wheelbase | y | 1277 mm |
| | Standard mast reference of the machine | | FVD 30 |
| | **Weight** | | |
| 2.1 | Service weight | | 2940 kg |
| 2.2 | Weight on front axle (laden) / rear axle (laden) | | 3950 kg / 590 kg |
| 2.3 | Weight on front axle (Unladen) / rear axle (Unladen) | | 1340 kg / 1600 kg |
| | **Wheels** | | |
| 3.1 | Tires type | | Solid tires |
| 3.2 | Dimensions of front wheels | | 18x7-8 |
| 3.3 | Dimensions of rear wheels | | 15x4,5-8 |
| 3.5 | Number of front wheels / rear wheels | | 2 / 1 |
| 3.5.2 | Number of drive wheels | | 2 |
| 3.6 | Front wheel gauge | b10 | 914 mm |
| 3.7 | Rear wheel gauge | b11 | 178 mm |
| | **Dimensions** | | |
| 4.7 | Height of overhead guard (cabin) | h6 | 2147 mm |
| 4.8 | Seat height/stand height | h7 | 1120 mm |
| 4.12 | Height of towing bar (coupling height) | h10 | 525 mm |
| 4.19 | Overall length | l1 | 2776 mm |
| 4.20 | Length to face of forks | l2 | 1856 mm |
| 4.21 | Overall width | b1 | 1086 mm |
| 4.22 | Forks section / width / length | s / e / l | 35 mm x 100 mm x 920 mm |
| 4.23 | Fork carriage ISO 2328 (class/form) A/B | | 2A |
| 4.24 | Fork carriage width | b3 | 1000 mm |
| 4.31 | Ground clearance below mast | m1 | 100 mm |
| 4.32 | Ground clearance at centre of wheelbase | m2 | 110 mm |
| 4.33 | Aisle Width for pallets 1000 x 1200 crossways | Ast | 3156 mm |
| 4.34 | Aisle width for 800 x 1200 pallet lengthways | Ast | 3280 mm |
| 4.35 | Turning radius | Wa | 1470 mm |
| | **Performances** | | |
| 5.1 | Travel speed (laden / unladen) | | 16 km/h-16 km/h |
| 5.2 | Lifting speed (laden / unladen) | | 0.45 m/s-0.60 m/s |
| 5.3 | Lowering speed (laden / unladen) | | 0.46 m/s-0.44 m/s |
| 5.5 | Drawbar pull (Laden / Unladen) | | 3300 daN / 3900 daN |
| 5.7 | Gradeability (laden / unladen) | | 16 % / 18 % |
| 5.10 | Service brake | | Hydraulic |
| | **Engine** | | |
| 6.1 | Drive motor rating S2 60 min | | 2.50 kW |
| 6.2 | Lift motor rating at S3 15% | | 11 kW |
| 6.3 | Battery according to DIN 43531/35/36 A, B, C | | Lithium |
| 6.4 | Battery voltage / capacity | | 76.80 V / 230 Ah |
| 6.5 | Battery weight (+/- 5%) | | 185 kg |
| 6.6 | Energy consumption according to VDI cycle (kWh/h) | | 3.80 kWh/h |
| | **Miscellaneous** | | |
| 8.2 | Working hydraulic pressure for attachments | | 185 bar |
| 8.3 | Oil flow rate for attachments | | 30 l/min |
| 8.4 | Sound level at the driver's ear according to DIN 12 053 | | 70 dB |

## ME 316 LIFT - Dimensional drawing

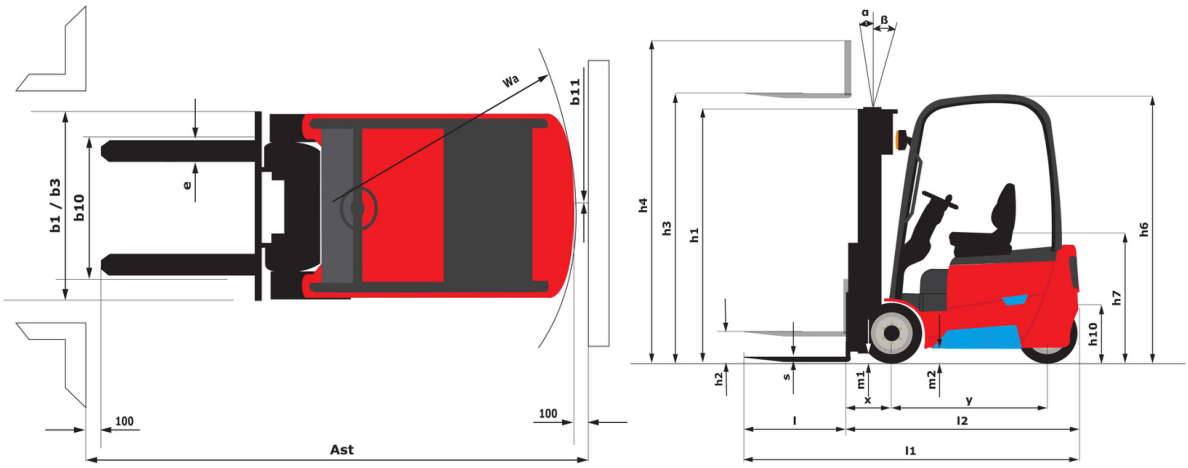

# Characteristics of masts and residual capacities

| Full Visibility Duplex (FVD) | | FVD 30 | FVD 33 | FVD 40 | FVD 45 |
|---|---|---|---|---|---|
| α - Mast/fork carriage tilt, forward | ° | 7 | 7 | 7 | 7 |
| β - Mast/fork carriage tilt, backward | ° | 6 | 6 | 6 | 6 |
| h1 - Mast lowered height | mm | 1988 | 2138 | 2588 | 2838 |
| h2 - Mast free lift | mm | 140 | 140 | 140 | 140 |
| h3 - Mast lifting height | mm | 3000 | 3300 | 4000 | 4500 |
| h4 - Mast extended height | mm | 3560 | 3860 | 4560 | 5060 |
| Residual capacity at max height | kg | 1600 | 1600 | 1600 | 1500 |
| Residual capacity with integrated side shift at max heigth | kg | 1550 | 1550 | 1550 | 1450 |

| Free Lift Triplex (FLT) | | FLT 40 | FLT 45 | FLT 48 | FLT 50 | FLT 55 | FLT 60 | FLT 65 |
|---|---|---|---|---|---|---|---|---|
| α - Mast/fork carriage tilt, forward | ° | 3.50 | 3.50 | 6 | 3.50 | 3.50 | 3.50 | 3.50 |
| β - Mast/fork carriage tilt, backward | ° | 5 | 5 | 12 | 5 | 5 | 5 | 5 |
| h1 - Mast lowered height | mm | 1888 | 2038 | 1978 | 2213 | 2388 | 2588 | 2788 |
| h2 - Mast free lift | mm | 1292 | 1392 | 1492 | 1582 | 1792 | 1992 | 2192 |
| h3 - Mast lifting height | mm | 4000 | 4500 | 4800 | 5000 | 5500 | 6000 | 6500 |
| h4 - Mast extended height | mm | 4552 | 5052 | | 5552 | 6052 | 6552 | 7052 |
| Residual capacity at max height | kg | 1600 | 1500 | 1450 | 1400 | 1250 | 1100 | 900 |
| Residual capacity with integrated side shift at max heigth | kg | 1550 | 1450 | 1400 | 1350 | 1200 | 1050 | 850 |

# Equipment

| Standard |
|---|
| Audio warning on reverse movements |
| Electric parking brake |
| External charger - 10kW AC - Lithium-ion - Three-phase |
| LED front right and left working lights (x2) |
| Mechanical suspension PVC seat - Grammer MSG65 |
| Overhead guard - With roof window (Tempered glass) |
| Panoramic interior rear view mirror |
| Rear working light |

| Optional |
|---|
| Battery - 23.3kWh - Lithium-ion |
| Battery - 46.7kWh - Lithium-ion |
| Charger - 20kW - 32A - 380V - Lithium-ion |
| Closed cab |
| External charger - 8kW AC - Lithium-ion - Three-phase |
| Heating in cab |
| LED front blue lamp |
| LED rear blue lamp |
| Mini levers - 4 hydraulics mouvments |
| Non marking tires |
| Open cab |
| Overhead guard - With roof window (Tempered glass) |
| Writing table |

**Head Office**
B.P. 249 - 430 rue de l'Aubinière
44150 Ancenis Cedex - France
Tel: +33 (0)2 40 09 10 11 - Fax: +33 (0)2 40 09 10 97
www.manitou.com

This publication provides a description of the configuration versions and options for Manitou products, which may differ for equipment. The equipment presented in this brochure may be part of a series, as an option, or it may not be available, depending on the versions. Manitou reserves the right, at any time and without notice, to amend the specifications described and represented. The specifications provided do not bind the manufacturer. For more details, please contact your Manitou agent. This is not a contractually binding document. The presentation of the products is not contractually binding. List of specifications non-exhaustive. The logos as well as the visual identity of the company are owned by Manitou and cannot be used without authorisation. All rights reserved. The photos and diagrams contained in this brochure are only provided for consultation and information purposes.
MANITOU BF SA - Limited company with board of directors - Share capital: 39,668,399 euros - 857 802 508 RCS Nantes