Technical sheet :

MC 25-4 ST5

MANITOU
HANDLING YOUR WORLD

	Technical characteristics		Metric
1.1	Manufacturer		Manitou
1.2	Model Name		MC 25-4 ST5
1.3	Power source		Diesel
1.4	Operator type		Seated
1.5	Max. capacity	Q	2500 kg
1.6	Load center of gravity	c	500 mm
1.8	Load distance, centre of drive axle to fork	x	621 mm
1.9	Wheelbase	y	1900 mm
	Weight		
	Standard mast reference of the machine		FVD 33
2.1	Service weight		4290 kg
2.2	Weight on front axle (laden) / rear axle (laden)		5970 kg / 820 kg
2.3	Weight on front axle (Unladen) / rear axle (Unladen)		1780 kg / 2510 kg
	Wheels		
3.1	Tires type		Pneumatic
3.2	Dimensions of front wheels		12,5/80-18/12 SL R4
3.3	Dimensions of rear wheels		27x10-12 SKS
3.5	Number of front wheels / rear wheels		2 / 2
3.5.2	Number of drive wheels		4
3.6	Front wheel gauge	b10	1159 mm
3.7	Rear wheel gauge	b11	1176 mm
	Dimensions		
4.7	Height of overhead guard (cabin) / Overall height of low overhead guard (Buggie version)	h6 / h6*	2155 mm / 1990 mm
4.8	Seat height/stand height	h7	1094 mm
4.19	Overall length	l1	4195 mm
4.20	Length to face of forks	l2	3045 mm
4.21	Overall width	b1	1450 mm
4.22	Forks section x width x length	s / e / l	40 mm x 100 mm / 1200 mm
4.23	Fork carriage ISO 2328 (class/form) A/B		2A
4.24	Fork carriage width	b3	1260 mm
4.31	Ground clearance below mast	m1	300 mm
4.32	Ground clearance at centre of wheelbase	m2	310 mm
4.35	Turning radius	Wa	3405 mm
	Performances		
5.1	Travel speed (laden / unladen)		12 km/h / 24.50 km/h
5.2	Lifting speed (laden / unladen)		0.47 m/s / 0.46 m/s
5.3	Lowering speed (laden / unladen)		0.50 m/s / 0.30 m/s
5.5	Drawbar pull (Laden)		3100 daN
5.7	Gradeability (laden)		51 %
5.10	Service brake		Hydraulic brakes by loss of pressure
	Transmission type		Hydrostatic
	Engine		
7.1	Engine brand / model / norm		Kubota / D1803 CRT E5B / Stage V
7.2	Engine power (Hp / kW)		50 Hp/37 kW
7.3	Rated speed		2700 rpm
7.4	Number of cylinders / Capacity of cylinders		3 - 1826 cm³
	Miscellaneous		
8.1	Type of drive control		Electronic
8.2	Working hydraulic pressure for attachments		200 bar
8.3	Oil flow rate for attachments		42 l/min

MC 25-4 ST5 - Dimensional drawing

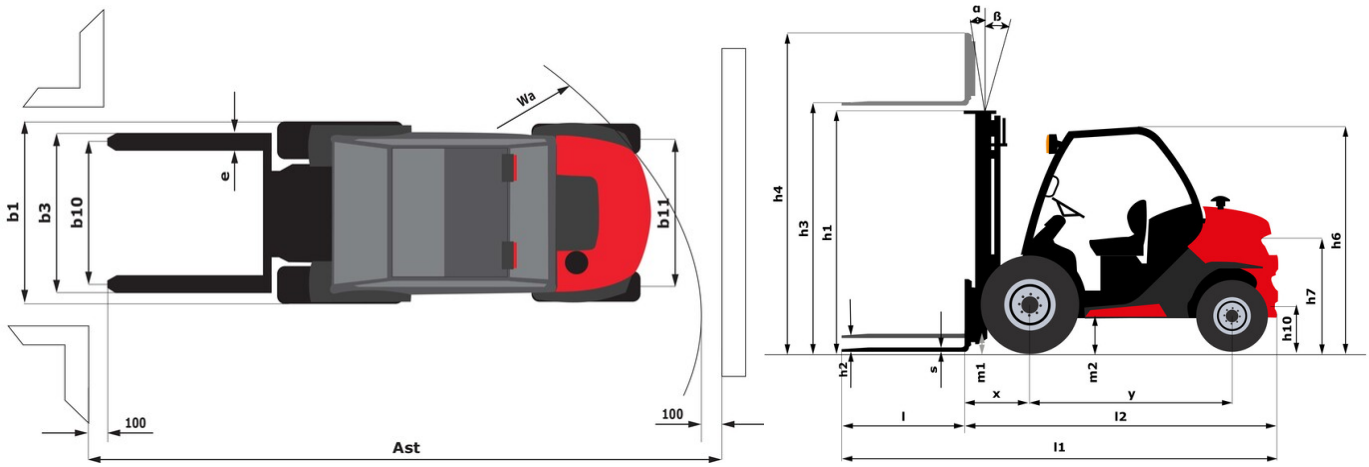

Characteristics of masts and residual capacities

Full Visibility Duplex (FVD)		FVD 33	FVD 37	FVD 45
α - Mast/fork carriage tilt, forward	°	12	12	12
β - Mast/fork carriage tilt, backward	°	10	10	10
h1 - Mast lowered height	mm	2338	2598	3038
h2 - Mast free lift	mm	112	112	112
h3 - Mast lifting height	mm	3300	3700	4500
h4 - Mast extended height	mm	4090	4490	5290
Residual capacity at max height	kg	2500	1450	800
Residual capacity with hooked-on side shift at max heigth	kg	2500	1450	800
Height at max capacity	mm	3000	3000	3000
Height at max capacity with hooked-on sideshift	mm	3000	3000	3000

Free Lift Triplex (FLT)		FLT 34	FLT 37	FLT 40	FLT 43	FLT 47	FLT 55
α - Mast/fork carriage tilt, forward	°	12	12	12	12	12	6
β - Mast/fork carriage tilt, backward	°	10	10	10	10	10	6
h1 - Mast lowered height	mm	1988	2088	2188	2338	2438	2788
h2 - Mast free lift	mm	1210	1310	1410	1510	1660	1920
h3 - Mast lifting height	mm	3400	3700	4000	4300	4700	5500
h4 - Mast extended height	mm	4236	4536	4836	5168	5536	6408
Residual capacity at max height	kg	1900	1500	1350	800	700	500
Residual capacity with hooked-on side shift at max heigth	kg	1800	1450	1350	700	700	5000
Height at max capacity	mm	3000	2900	3000	3000	3000	3000
Height at max capacity with hooked-on sideshift	mm	3000	3000	3000	3000	3000	3000

Full Visibility Triplex (FVT)		FVT 33
α - Mast/fork carriage tilt, forward	°	12
β - Mast/fork carriage tilt, backward	°	10
h1 - Mast lowered height	mm	1878
h2 - Mast free lift	mm	124
h3 - Mast lifting height	mm	3300
h4 - Mast extended height	mm	4079
Height at max capacity	mm	2500

Head Office
B.P. 249 - 430 rue de l'Aubinière
44150 Ancenis Cedex - France
Tel: +33 (0)2 40 09 10 11 - Fax: +33 (0)2 40 09 10 97
www.manitou.com

This publication provides a description of the configuration versions and options for Manitou products, which may differ for equipment. The equipment presented in this brochure may be part of a series, as an option, or it may not be available, depending on the versions. Manitou reserves the right, at any time and without notice, to amend the specifications described and represented. The specifications provided do not bind the manufacturer. For more details, please contact your Manitou agent. This is not a contractually binding document. The presentation of the products is not contractually binding. List of specifications non-exhaustive. The logos as well as the visual identity of the company are owned by Manitou and cannot be used without authorisation. All rights reserved. The photos and diagrams contained in this brochure are only provided for consultation and information purposes.
MANITOU BF SA - Limited company with board of directors - Share capital: 39,668,399 euros - 857 802 508 RCS Nantes