Technical sheet :

MC 18-4 ST5

MANITOU
HANDLING YOUR WORLD

	Technical characteristics		Metric
1.1	Manufacturer		Manitou
1.2	Model Name		MC 18-4 ST5
1.3	Power source		Diesel
1.4	Operator type		Seated
1.5	Max. capacity	Q	1800 kg
1.6	Load center of gravity	c	500 mm
1.8	Load distance, centre of drive axle to fork	x	616 mm
1.9	Wheelbase	y	1900 mm
	Weight		
	Standard mast reference of the machine		FVD 33
2.1	Service weight		3590 kg
2.2	Weight on front axle (laden) / rear axle (laden)		4670 kg / 720 kg
2.3	Weight on front axle (Unladen) / rear axle (Unladen)		1660 kg / 1930 kg
	Wheels		
3.1	Tires type		Pneumatic
3.2	Dimensions of front wheels		12,5/80-18/12 SL R4
3.3	Dimensions of rear wheels		27x10-12 SKS
3.5	Number of front wheels / rear wheels		2 / 2
3.5.2	Number of drive wheels		4
3.6	Front wheel gauge	b10	1159 mm
3.7	Rear wheel gauge	b11	1176 mm
	Dimensions		
4.7	Height of overhead guard (cabin) / Overall height of low overhead guard (Buggie version)	h6 / h6*	2155 mm / 1990 mm
4.8	Seat height/stand height	h7	1094 mm
4.19	Overall length	l1	4100 mm
4.20	Length to face of forks	l2	2950 mm
4.21	Overall width	b1	1450 mm
4.22	Forks section x width x length	s / e / l	35 mm x 100 mm / 1150 mm
4.23	Fork carriage ISO 2328 (class/form) A/B		2A
4.24	Fork carriage width	b3	1260 mm
4.31	Ground clearance below mast	m1	300 mm
4.32	Ground clearance at centre of wheelbase	m2	310 mm
4.35	Turning radius	Wa	3370 mm
	Performances		
5.1	Travel speed (laden / unladen)		12 km/h / 23.50 km/h
5.2	Lifting speed (laden / unladen)		0.44 m/s / 0.44 m/s
5.3	Lowering speed (laden / unladen)		0.40 m/s / 0.40 m/s
5.5	Drawbar pull (Laden)		1800 daN
5.7	Gradeability (laden)		35 %
5.10	Service brake		Hydraulic brakes by loss of pressure
	Transmission type		Hydrostatic
	Engine		
7.1	Engine brand / model / norm		Kubota / D1803 CR E5B / Stage V
7.2	Engine power (Hp / kW)		37 Hp/27 kW
7.3	Rated speed		2700 rpm
7.4	Number of cylinders / Capacity of cylinders		3 - 1826 cm³
	Miscellaneous		
8.1	Type of drive control		Electronic
8.2	Working hydraulic pressure for attachments		160 bar
8.3	Oil flow rate for attachments		31 l/min

MC 18-4 ST5 - Dimensional drawing

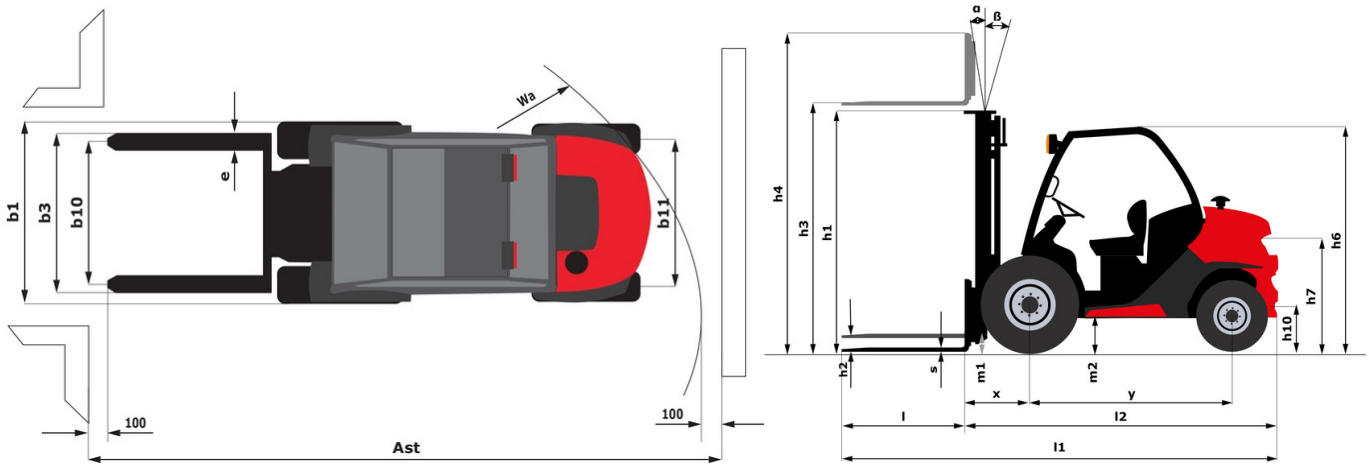

Characteristics of masts and residual capacities

Full Visibility Duplex (FVD)		FVD 33	FVD 37	FVD 40	FVD 45
α - Mast/fork carriage tilt, forward	°	12	12	12	12
β - Mast/fork carriage tilt, backward	°	10	10	10	10
h1 - Mast lowered height	mm	2348	2608	2798	3048
h2 - Mast free lift	mm	85	85	85	85
h3 - Mast lifting height	mm	3300	3700	4000	4500
h4 - Mast extended height	mm	4018	4428	4768	5268
Residual capacity at max height	kg	1800	1800		1100
Residual capacity with hooked-on side shift at max heigth	kg	1800	1800		1100
Height at max capacity	mm	3300	3700		3600
Height at max capacity with hooked-on sideshift	mm	3300	3700		3600

Free Lift Triplex (FLT)		FLT 37	FLT 43	FLT 47	FLT 55
α - Mast/fork carriage tilt, forward	°	12	12	12	6
β - Mast/fork carriage tilt, backward	°	10	10	10	6
h1 - Mast lowered height	mm	1998	2198	2348	2608
h2 - Mast free lift	mm	1305	1505	1655	1915
h3 - Mast lifting height	mm	3700	4300	4700	5500
h4 - Mast extended height	mm	4453	5053	5453	6253
Residual capacity at max height	kg	1600	1000	600	
Residual capacity with hooked-on side shift at max heigth	kg	1550	1000	600	
Height at max capacity	mm	3400	3400	3400	
Height at max capacity with hooked-on sideshift	mm	3300	3400	3400	

Full Visibility Triplex (FVT)		FVT 33
α - Mast/fork carriage tilt, forward	°	12
β - Mast/fork carriage tilt, backward	°	10
h1 - Mast lowered height	mm	1888
h2 - Mast free lift	mm	135
h3 - Mast lifting height	mm	3300
h4 - Mast extended height	mm	4048
Residual capacity at max height	kg	1800
Residual capacity with hooked-on side shift at max heigth	kg	1800
Height at max capacity	mm	3300
Height at max capacity with hooked-on sideshift	mm	3300

Equipment

Standard
Differential Lock
Distributor with lever in cross - 2 hydraulic movments
Ecostop
Front tires - SOLIDEAL - SL-R4 - 12.5/80 R18 12-Ply - Rough terrain
Mechanical suspension vinyl seat - PILOT
Rear tires - SOLIDEAL - XTRA SKS - 27x10-12 R12 12-Ply - Rough terrain

Optional
4th hydraulic movement
Air suspension fabric seat - GRAMMER
Closed cab
Electrovalve 3 hydraulicfunctions on the_top of theboom
Enclosed cab buggy version
Joystick Switch and Move (JSM)
LED Rotative Beacon
LED front work lights (x2)
Load backrest
Open cab buggy version
Radio

Head Office
B.P. 249 - 430 rue de l'Aubinière
44150 Ancenis Cedex - France
Tel: +33 (0)2 40 09 10 11 - Fax: +33 (0)2 40 09 10 97
www.manitou.com

This publication provides a description of the configuration versions and options for Manitou products, which may differ for equipment. The equipment presented in this brochure may be part of a series, as an option, or it may not be available, depending on the versions. Manitou reserves the right, at any time and without notice, to amend the specifications described and represented. The specifications provided do not bind the manufacturer. For more details, please contact your Manitou agent. This is not a contractually binding document. The presentation of the products is not contractually binding. List of specifications non-exhaustive. The logos as well as the visual identity of the company are owned by Manitou and cannot be used without authorisation. All rights reserved. The photos and diagrams contained in this brochure are only provided for consultation and information purposes.
MANITOU BF SA - Limited company with board of directors - Share capital: 39,668,399 euros - 857 802 508 RCS Nantes