Technical sheet :

M 70-2 H D ST5

MANITOU
HANDLING YOUR WORLD

	Technical characteristics		Metric
1.1	Manufacturer		MANITOU
1.2	Model Name		M 70-2 H D ST5
1.3	Power source		Diesel
1.4	Operator type		Seated
1.5	Max. capacity	Q	7000 kg
1.6	Load center of gravity	c	600 mm
1.8	Load distance, centre of drive axle to fork	x	803 mm
1.9	Wheelbase	y	2493 mm
	Weight		
	Standard mast reference of the machine		FVD 40
2.1	Service weight		9880 kg
2.2	Weight on front axle (laden) / rear axle (laden)		14954 kg / 1926 kg
2.3	Weight on front axle (Unladen) / rear axle (Unladen)		4040 kg / 5840 kg
	Wheels		
3.1	Tires type		Inflatable
3.2	Dimensions of front wheels		18R19.5 8T N20XF
3.3	Dimensions of rear wheels		265/70R19.5 6T P30HT3
3.5	Number of front wheels / rear wheels		2 / 2
3.5.2	Number of drive wheels		2
3.6	Front wheel gauge	b10	1700 mm
3.7	Rear wheel gauge	b11	1545 mm
	Dimensions		
4.7	Height of overhead guard (cabin)	h6	2475 mm
4.8	Seat height/stand height	h7	1485 mm
4.19	Overall length	l1	5700 mm
4.20	Length to face of forks	l2	4200 mm
4.21	Overall width	b1	2155 mm
4.22	Forks section x width x length	s / e / l	70 mm x 150 mm / 1500 mm
4.23	Fork carriage ISO 2328 (class/form) A/B		4A
4.24	Fork carriage width	b3	1750 mm
4.31	Ground clearance below mast	m1	300 mm
4.32	Ground clearance at centre of wheelbase	m2	410 mm
4.33	Aisle width for 1000 x 1200 pallet widthways	Ast	6703 mm
4.34	Aisle width for 800 x 1200 pallet lengthways	Ast	6703 mm
4.35	Turning radius	Wa	4200 mm
	Performances		
5.1	Travel speed (laden / unladen)		11 m/s / 23 km/h
5.2	Lifting speed (laden / unladen)		0.32 m/s / 0.32 m/s
5.3	Lowering speed (laden / unladen)		0.40 m/s / 0.34 m/s
5.5	Drawbar pull (Laden / Unladen)		8060 daN / 2930 daN
5.7	Gradeability (laden / unladen)		45 % / 27 %
5.10	Service brake		Hydraulic
	Transmission type		Hydrostatic
	Engine		
7.1	Engine brand / model / norm		Deutz / TD 3,6 / Stage V
7.2	Engine power (Hp / kW)		75 Hp/55.40 kW
7.3	Rated speed		2500 rpm
7.4	Number of cylinders		4
	Miscellaneous		
8.2	Working hydraulic pressure for attachments		230 bar
8.3	Oil flow rate for attachments		80 l/min
8.4	Sound level at the driver's ear according to DIN 12 053		78 dB

M 70-2 H D ST5 - Dimensional drawing

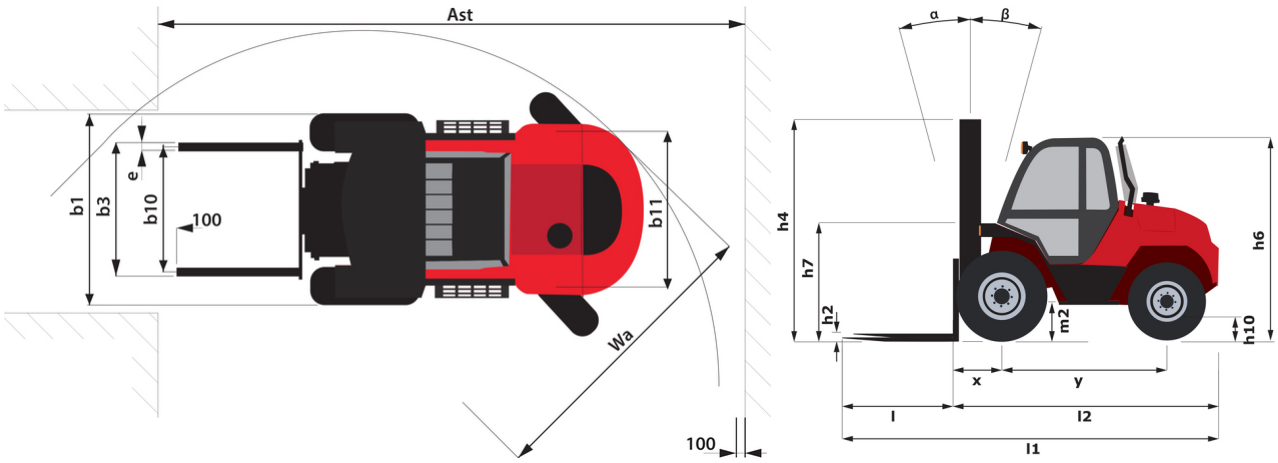

Characteristics of masts and residual capacities

Full Visibility Duplex (FVD)		FVD 36	FVD 40	FVD 45
α - Mast/fork carriage tilt, forward	°	15	15	15
β - Mast/fork carriage tilt, backward	°	15	15	15
h1 - Mast lowered height	mm	3145	3345	3595
h3 - Mast lifting height	mm	3600		4500
h4 - Mast extended height	mm	4960	5360	5860
Residual capacity at max height	kg	7000	7000	5000
Residual capacity with hooked-on side shift at max heigth	kg	6300	6350	3850
Height at max capacity	mm	3600	4000	4000

Head Office
B.P. 249 - 430 rue de l'Aubinière
44150 Ancenis Cedex - France
Tel: +33 (0)2 40 09 10 11 - Fax: +33 (0)2 40 09 10 97
www.manitou.com

This publication provides a description of the configuration versions and options for Manitou products, which may differ for equipment. The equipment presented in this brochure may be part of a series, as an option, or it may not be available, depending on the versions. Manitou reserves the right, at any time and without notice, to amend the specifications described and represented. The specifications provided do not bind the manufacturer. For more details, please contact your Manitou agent. This is not a contractually binding document. The presentation of the products is not contractually binding. List of specifications non-exhaustive. The logos as well as the visual identity of the company are owned by Manitou and cannot be used without authorisation. All rights reserved. The photos and diagrams contained in this brochure are only provided for consultation and information purposes.
MANITOU BF SA - Limited company with board of directors - Share capital: 39,668,399 euros - 857 802 508 RCS Nantes