Technical sheet :

M 50-4 D ST5

MANITOU
HANDLING YOUR WORLD

	Technical characteristics		Metric
1.1	Manufacturer		MANITOU
1.2	Model Name		M 50-4 D ST5
1.3	Power source		Diesel
1.4	Operator type		Seated
1.5	Max. capacity	Q	5000 kg
1.6	Load center of gravity	c	600 mm
1.8	Load distance, centre of drive axle to fork	x	773 mm
1.9	Wheelbase	y	2120 mm
	Weight		
	Standard mast reference of the machine		FVD 37
2.1	Service weight		8325 kg
2.2	Weight on front axle (laden) / rear axle (laden)		11520 kg / 1805 kg
2.3	Weight on front axle (Unladen) / rear axle (Unladen)		3285 kg / 5040 kg
	Wheels		
3.1	Tires type		Pneumatic
3.2	Dimensions of front wheels		18-22,5 MPT-06
3.3	Dimensions of rear wheels		340/80 R18 XMCL
3.5	Number of front wheels / rear wheels		2 / 2
3.5.2	Number of drive wheels		4
3.6	Front wheel gauge	b10	1620 mm
3.7	Rear wheel gauge	b11	1740 mm
	Dimensions		
4.7	Height of overhead guard (cabin) / Overall height of low overhead guard (Buggie version)	h6 / h6*	2486 mm / 2486 mm
4.8	Seat height/stand height	h7	1455 mm
4.19	Overall length	l1	4948 mm
4.20	Length to face of forks	l2	3748 mm
4.21	Overall width	b1	2080 mm
4.22	Forks section x width x length	s / e / l	60 mm x 150 mm / 1200 mm
4.23	Fork carriage ISO 2328 (class/form) A/B		4A
4.24	Fork carriage width	b3	1670 mm
4.31	Ground clearance below mast	m1	300 mm
4.32	Ground clearance at centre of wheelbase	m2	426 mm
4.33	Aisle width for 1000 x 1200 pallet widthways	Ast	6812 mm
4.34	Aisle width for 800 x 1200 pallet lengthways	Ast	6812 mm
4.35	Turning radius	Wa	4640 mm
	Performances		
5.1	Travel speed (laden / unladen)		10 km/h / 22 km/h
5.2	Lifting speed (laden / unladen)		0.40 m/s / 0.40 m/s
5.3	Lowering speed (laden / unladen)		0.50 m/s / 0.40 m/s
5.5	Drawbar pull (Laden)		11000 daN
5.10	Service brake		Hydraulic
	Transmission type		Torque converter
	Engine		
7.1	Engine brand / model / norm		Deutz / TCD 2,9 / Stage V
7.2	Engine power (Hp / kW)		75 Hp/55 kW
7.3	Rated speed		2300 rpm
7.4	Number of cylinders / Capacity of cylinders		4 - 2925 cm³
	Miscellaneous		
8.2	Working hydraulic pressure for attachments		230 bar
8.3	Oil flow rate for attachments		97 l/min
8.4	Sound level at the driver's ear according to DIN 12 053		78 dB

M 50-4 D ST5 - Dimensional drawing

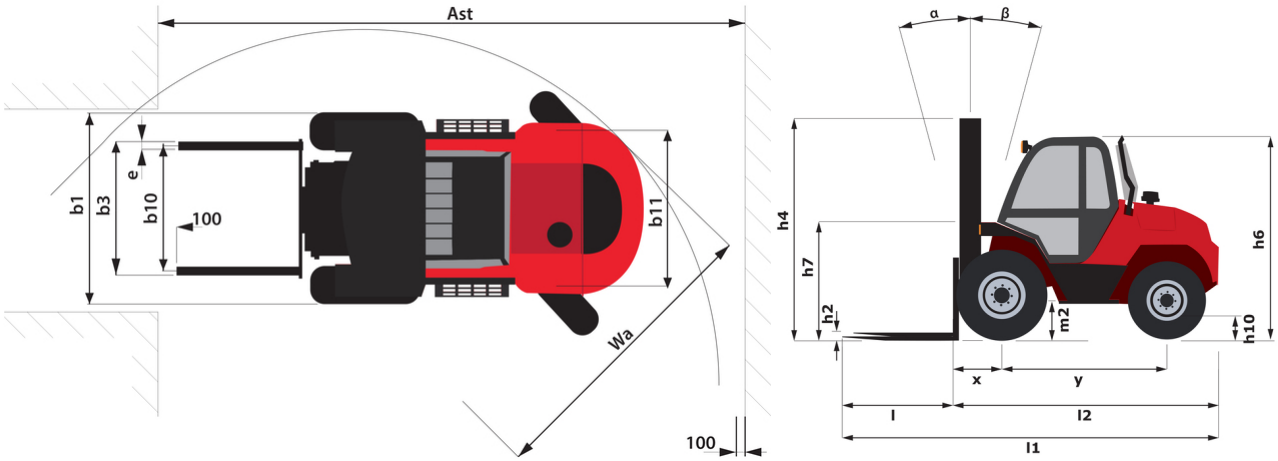

Characteristics of masts and residual capacities

Full Visibility Duplex (FVD)		FVD 33	FVD 35	FVD 37	FVD 40	FVD 45	FVD 50
α - Mast/fork carriage tilt, forward	°	15	15	15	15	15	10
β - Mast/fork carriage tilt, backward	°	15	15	15	15	15	15
h1 - Mast lowered height	mm	2670	2770	2870	3020	3270	3520
h3 - Mast lifting height	mm	3300	3500	3700	4000	4500	5000
Residual capacity at max height	kg	5000	5000	5000	5000	3600	2200
Residual capacity with hooked-on side shift at max heigth	kg	4700	4700	4700	4000	4000	3800
Height at max capacity	mm	3300	3500	3700	4000	4000	4000
Height at max capacity with hooked-on sideshift	mm	3300	3500	3700	4000	4000	4000

Free Lift Triplex (FLT)		FLT 43	FLT 45	FLT 47	FLT 50	FLT 55	FLT 60
α - Mast/fork carriage tilt, forward	°	15	15	15	10	10	10
β - Mast/fork carriage tilt, backward	°	15	15	15	15	15	15
h1 - Mast lowered height	mm	2470	2545	2605	2720	2870	3045
h2 - Mast free lift	mm	1455	1530	1590	1705	1855	2030
h3 - Mast lifting height	mm	4300	4500	4700	5000	5500	6000
Residual capacity at max height	kg	4500	4350	3500	2800	1800	900
Residual capacity with hooked-on side shift at max heigth	kg		4100	3600	2100	2000	900
Height at max capacity	mm	3800	4000	4000	4000	4000	4000
Height at max capacity with hooked-on sideshift	mm		4000	4000	4000	4000	4000

Equipment

Standard
Battery cut-off
Easy link
Front and rear road lighting
Front tires - Rough terrain profil
Mechanical suspension PVC seat - Grammer MSG65
Open cab
Oscillating rear axle
Rear tires - Rough terrain profil
Windshield wiper (front and rear)

Optional
Audio warning on reverse movements
Enclosed Cab with Heat and A/C
Hydraulic kit 4th element
LED Rotative Beacon
Load backrest
Pneumatic seat
Sideshift carriage

Head Office
B.P. 249 - 430 rue de l'Aubinière
44150 Ancenis Cedex - France
Tel: +33 (0)2 40 09 10 11 - Fax: +33 (0)2 40 09 10 97
www.manitou.com

This publication provides a description of the configuration versions and options for Manitou products, which may differ for equipment. The equipment presented in this brochure may be part of a series, as an option, or it may not be available, depending on the versions. Manitou reserves the right, at any time and without notice, to amend the specifications described and represented. The specifications provided do not bind the manufacturer. For more details, please contact your Manitou agent. This is not a contractually binding document. The presentation of the products is not contractually binding. List of specifications non-exhaustive. The logos as well as the visual identity of the company are owned by Manitou and cannot be used without authorisation. All rights reserved. The photos and diagrams contained in this brochure are only provided for consultation and information purposes.
MANITOU BF SA - Limited company with board of directors - Share capital: 39,668,399 euros - 857 802 508 RCS Nantes