Technical sheet :

M 40-2 D ST5

MANITOU
HANDLING YOUR WORLD

	Technical characteristics		Metric
1.1	Manufacturer		MANITOU
1.2	Model Name		M 40-2 D ST5
1.3	Power source		Diesel
1.4	Operator type		Seated
1.5	Max. capacity	Q	4000 kg
1.6	Load center of gravity	c	500 mm
1.8	Load distance, centre of drive axle to fork	x	763 mm
1.9	Wheelbase	y	2060 mm
	Weight		
	Standard mast reference of the machine		FVD 37
2.1	Service weight		6915 kg
2.2	Weight on front axle (laden) / rear axle (laden)		9075 kg / 1840 kg
2.3	Weight on front axle (Unladen) / rear axle (Unladen)		2625 kg / 4290 kg
	Wheels		
3.1	Tires type		Pneumatic
3.2	Dimensions of front wheels		18-19,5 18PR A224
3.3	Dimensions of rear wheels		10R17,5 G291 GY
3.5	Number of front wheels / rear wheels		2 / 2
3.5.2	Number of drive wheels		2
3.6	Front wheel gauge	b10	1600 mm
3.7	Rear wheel gauge	b11	1640 mm
	Dimensions		
4.7	Height of overhead guard (cabin) / Overall height of low overhead guard (Buggie version)	h6 / h6*	2440 mm / 2440 mm
4.8	Seat height/stand height	h7	1407 mm
4.19	Overall length	l1	4858 mm
4.20	Length to face of forks	l2	3658 mm
4.21	Overall width	b1	2057 mm
4.22	Forks section x width x length	s / e / l	150 mm x 150 mm / 1200 mm
4.23	Fork carriage ISO 2328 (class/form) A/B		3A
4.24	Fork carriage width	b3	1670 mm
4.31	Ground clearance below mast	m1	250 mm
4.32	Ground clearance at centre of wheelbase	m2	377 mm
4.33	Aisle width for 1000 x 1200 pallet widthways	Ast	5560 mm
4.34	Aisle width for 800 x 1200 pallet lengthways	Ast	5560 mm
4.35	Turning radius	Wa	3395 mm
	Performances		
5.1	Travel speed (laden / unladen)		22 km/h / 22 km/h
5.2	Lifting speed (laden / unladen)		0.40 m/s / 0.40 m/s
5.3	Lowering speed (laden / unladen)		0.50 m/s / 0.40 m/s
5.5	Drawbar pull (Laden)		6900 daN
5.10	Service brake		Hydraulic
	Transmission type		Torque converter
	Engine		
7.1	Engine brand / model / norm		Deutz / TCD 2,9 / Stage V
7.2	Engine power (Hp / kW)		75 Hp/55 kW
7.3	Rated speed		2300 rpm
7.4	Number of cylinders / Capacity of cylinders		4 - 2925 cm³
	Miscellaneous		
8.2	Working hydraulic pressure for attachments		210 bar
8.3	Oil flow rate for attachments		97 l/min
8.4	Sound level at the driver's ear according to DIN 12 053		78 dB

M 40-2 D ST5 - Dimensional drawing

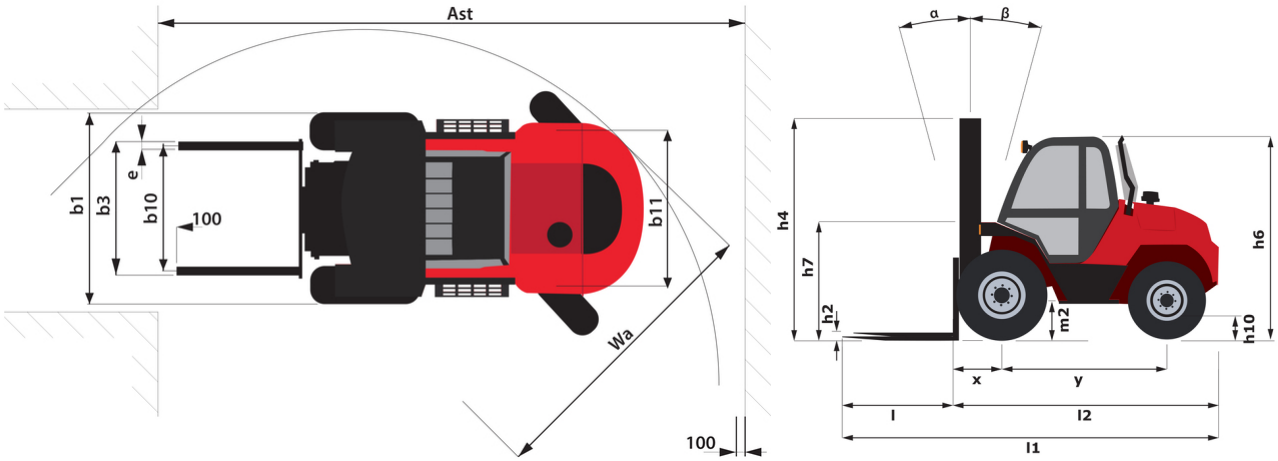

Characteristics of masts and residual capacities

Full Visibility Duplex (FVD)		FVD 33	FVD 35	FVD 37	FVD 40	FVD 45	FVD 50
α - Mast/fork carriage tilt, forward	°	15	15	15	15	15	10
β - Mast/fork carriage tilt, backward	°	15	15	15	15	15	15
h1 - Mast lowered height	mm	2625	2725	2825	2975	3225	3475
h3 - Mast lifting height	mm	3300	3500	3700	4000	4500	5000
Residual capacity at max height	kg	4000	4000	4000	4000	4000	4000
Residual capacity with hooked-on side shift at max heigth	kg	4000	4000	4000	4000	3900	3600
Height at max capacity	mm	3300	3500	3700	4000	4500	5000
Height at max capacity with hooked-on sideshift	mm	3300	3500	3700	4000	4200	4000

Free Lift Triplex (FLT)		FLT 43	FLT 45	FLT 47	FLT 50	FLT 55	FLT 60
α - Mast/fork carriage tilt, forward	°	15	15	15	10	10	10
β - Mast/fork carriage tilt, backward	°	15	15	15	15	15	15
h1 - Mast lowered height	mm	2425	2500	2560	2675	2825	3000
h2 - Mast free lift	mm	1455	1530	1590	1705	1855	2030
h3 - Mast lifting height	mm	4300	4500	4700	5000	5500	6000
Residual capacity at max height	kg	4000	4000	3000		2500	
Residual capacity with hooked-on side shift at max heigth	kg		3650	3650		2500	
Height at max capacity	mm	4300	4500	4200	2500	4500	2500
Height at max capacity with hooked-on sideshift	mm		3500	4200		3300	

Head Office
B.P. 249 - 430 rue de l'Aubinière
44150 Ancenis Cedex - France
Tel: +33 (0)2 40 09 10 11 - Fax: +33 (0)2 40 09 10 97
www.manitou.com

This publication provides a description of the configuration versions and options for Manitou products, which may differ for equipment. The equipment presented in this brochure may be part of a series, as an option, or it may not be available, depending on the versions. Manitou reserves the right, at any time and without notice, to amend the specifications described and represented. The specifications provided do not bind the manufacturer. For more details, please contact your Manitou agent. This is not a contractually binding document. The presentation of the products is not contractually binding. List of specifications non-exhaustive. The logos as well as the visual identity of the company are owned by Manitou and cannot be used without authorisation. All rights reserved. The photos and diagrams contained in this brochure are only provided for consultation and information purposes.
MANITOU BF SA - Limited company with board of directors - Share capital: 39,668,399 euros - 857 802 508 RCS Nantes