Technical sheet :

M 30-4 D ST5

MANITOU
HANDLING YOUR WORLD

	Technical characteristics		Metric
1.1	Manufacturer		MANITOU
1.2	Model Name		M 30-4 D ST5
1.3	Power source		Diesel
1.4	Operator type		Seated
1.5	Max. capacity	Q	3000 kg
1.6	Load center of gravity	c	500 mm
1.8	Load distance, centre of drive axle to fork	x	747 mm
1.9	Wheelbase	y	1995 mm
	Weight		
	Standard mast reference of the machine		FVD 37
2.1	Service weight		5965 kg
2.2	Weight on front axle (laden) / rear axle (laden)		7490 kg / 1475 kg
2.3	Weight on front axle (Unladen) / rear axle (Unladen)		2155 kg / 3810 kg
	Wheels		
3.1	Tires type		Pneumatic
3.2	Dimensions of front wheels		405/70-20 149B 1323
3.3	Dimensions of rear wheels		10,5-18 12PR 1317
3.5	Number of front wheels / rear wheels		2 / 2
3.5.2	Number of drive wheels		4
3.6	Front wheel gauge	b10	1520 mm
3.7	Rear wheel gauge	b11	1630 mm
	Dimensions		
4.7	Height of overhead guard (cabin) / Overall height of low overhead guard (Buggie version)	h6 / h6*	2458 mm / 2458 mm
4.8	Seat height/stand height	h7	1426 mm
4.19	Overall length	l1	4701 mm
4.20	Length to face of forks	l2	3501 mm
4.21	Overall width	b1	1927 mm
4.22	Forks section x width x length	s / e / l	40 mm x 125 mm / 1200 mm
4.23	Fork carriage ISO 2328 (class/form) A/B		3A
4.24	Fork carriage width	b3	1470 mm
4.31	Ground clearance below mast	m1	399 mm
4.32	Ground clearance at centre of wheelbase	m2	395 mm
4.33	Aisle width for 1000 x 1200 pallet widthways	Ast	6180 mm
4.34	Aisle width for 800 x 1200 pallet lengthways	Ast	6180 mm
4.35	Turning radius	Wa	4030 mm
	Performances		
5.1	Travel speed (laden / unladen)		10 km/h / 22 km/h
5.2	Lifting speed (laden / unladen)		0.60 m/s / 0.60 m/s
5.3	Lowering speed (laden / unladen)		0.40 m/s / 0.40 m/s
5.5	Drawbar pull (Laden / Unladen)		6290 daN / 4250 daN
5.10	Service brake		Hydraulic
	Transmission type		Torque converter
	Engine		
7.1	Engine brand / model / norm		Deutz / TCD 2,9 / Stage V
7.2	Engine power (Hp / kW)		75 Hp/55 kW
7.3	Rated speed		2300 rpm
7.4	Number of cylinders / Capacity of cylinders		4 - 2925 cm³
	Miscellaneous		
8.2	Working hydraulic pressure for attachments		185 bar
8.3	Oil flow rate for attachments		97 l/min
8.4	Sound level at the driver's ear according to DIN 12 053		78 dB

M 30-4 D ST5 - Dimensional drawing

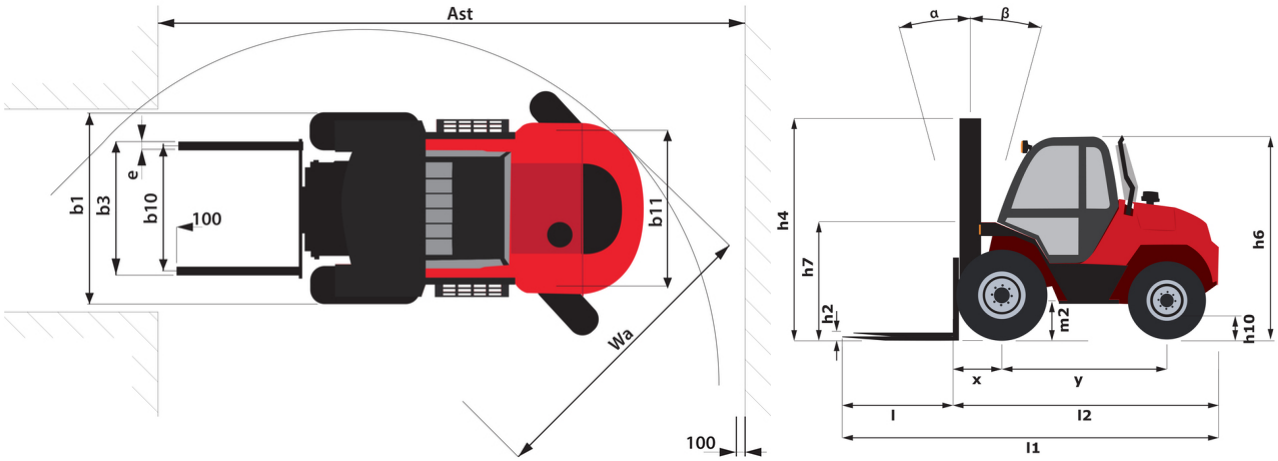

Characteristics of masts and residual capacities

Full Visibility Duplex (FVD)		FVD 37	FVD 45
α - Mast/fork carriage tilt, forward	°	6	6
β - Mast/fork carriage tilt, backward	°	12	12
h1 - Mast lowered height	mm	2689	3129
h3 - Mast lifting height	mm	3700	4500
Residual capacity at max height	kg	3000	3000
Residual capacity with hooked-on side shift at max heigth	kg	3000	3000
Height at max capacity	mm	3700	4500
Height at max capacity with hooked-on sideshift	mm	3700	4500

Free Lift Triplex (FLT)		FLT 43	FLT 50	FLT 65
α - Mast/fork carriage tilt, forward	°	6	6	6
β - Mast/fork carriage tilt, backward	°	12	12	12
h1 - Mast lowered height	mm	2429	2689	3379
h2 - Mast free lift	mm	1573	1833	2523
h3 - Mast lifting height	mm	4300	5000	6500
Residual capacity at max height	kg	3000		
Residual capacity with hooked-on side shift at max heigth	kg	3000	1600	500
Height at max capacity	mm	4300	2500	2500
Height at max capacity with hooked-on sideshift	mm	3000	4100	4300

Full Visibility Triplex (FVT)		FVT 55
α - Mast/fork carriage tilt, forward	°	6
β - Mast/fork carriage tilt, backward	°	10
h1 - Mast lowered height	mm	2959
h3 - Mast lifting height	mm	5500
Residual capacity at max height	kg	2000
Residual capacity with hooked-on side shift at max heigth	kg	1500
Height at max capacity	mm	4200
Height at max capacity with hooked-on sideshift	mm	4200

Equipment

Optional
Audio warning on reverse
Enclosed Cab with Heat and A/C
Front and Rear - Work Lights
Load backrest
Open cab

Head Office
B.P. 249 - 430 rue de l'Aubinière
44150 Ancenis Cedex - France
Tel: +33 (0)2 40 09 10 11 - Fax: +33 (0)2 40 09 10 97
www.manitou.com

This publication provides a description of the configuration versions and options for Manitou products, which may differ for equipment. The equipment presented in this brochure may be part of a series, as an option, or it may not be available, depending on the versions. Manitou reserves the right, at any time and without notice, to amend the specifications described and represented. The specifications provided do not bind the manufacturer. For more details, please contact your Manitou agent. This is not a contractually binding document. The presentation of the products is not contractually binding. List of specifications non-exhaustive. The logos as well as the visual identity of the company are owned by Manitou and cannot be used without authorisation. All rights reserved. The photos and diagrams contained in this brochure are only provided for consultation and information purposes.
MANITOU BF SA - Limited company with board of directors - Share capital: 39,668,399 euros - 857 802 508 RCS Nantes