Technical sheet :

KLEOS HM 250 D25

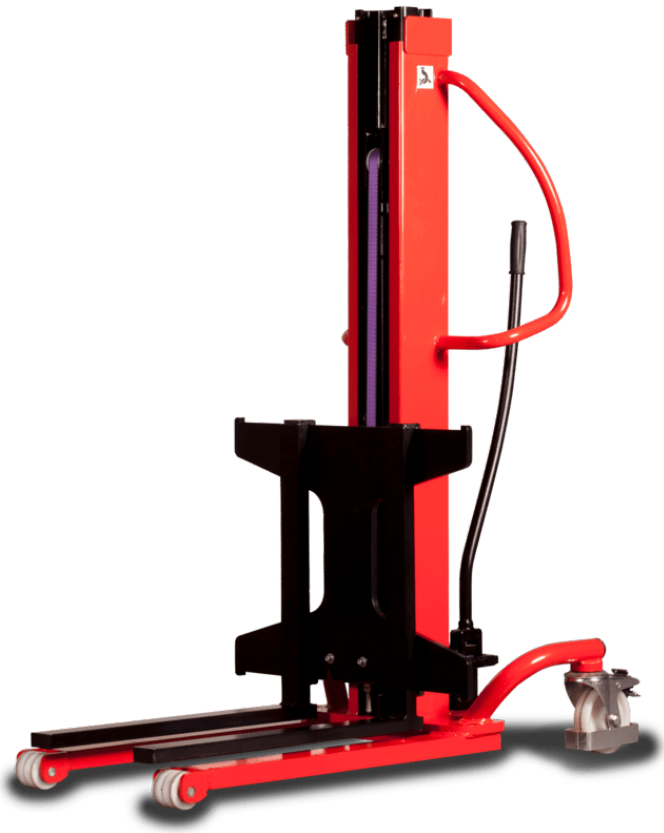

MANITOU
HANDLING YOUR WORLD

	Technical characteristics		Metric
1.1	Manufacturer		Manitou
1.2	Model Name		Kleos HM 250 D25
1.3	Power source		Manual
1.4	Operator type		Pedestrian
1.5	Max. capacity	Q	250 kg
1.6	Load center of gravity	c	250 mm
	Weight		
2.1	Overall weight without tools		110 kg
	Wheels		
3.1	Tires type		Nylon
3.2	Dimensions of front wheels		2x (75x65)
3.3	Dimensions of rear wheels		2x (150x50)
	Dimensions		
4.2	Mast lowered height	h1	1815 mm
4.5	Mast extended height	h4	3055 mm
4.19	Overall length	l1	1032 mm
4.20	Length to face of forks	l2	571 mm
4.21	Overall width	b1	710 mm
4.25	Forks spread	b5	529 mm
4.32	Ground clearance at centre of wheelbase	m2	40 mm
	Performances		
5.2	Lifting speed (laden / unladen)		0.10 m/s / 0.10 m/s
5.3	Lowering speed (laden / unladen)		0.10 m/s / 0.10 m/s
5.11	Parking brake		Mecanic

Kleos HM 250 D25 - Dimensional drawing

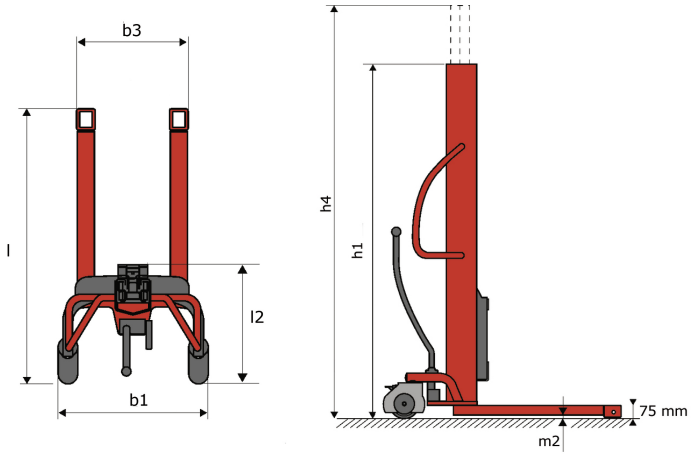

Tool characteristics

Tool 250 kg	Attachment capacity	Center of gravity of load	A1	A2	B	B1		C	D	E	E1	E2	F	Weight
	kg	mm	mm	mm	mm	mm	mm	mm	mm	mm	mm	mm	mm	kg
EPE 250	250	250	500	515	40	-	-	270	-	-	-	-	320	21
FA 250	250	250	500	540	-	230	650	50	50	20	-	-	680	33
PLF 250	200	300	620	635	500	-	-	280	-	88	-	-	630	40
POT 250	150	400	425	440	50	-	-	170	-	-	-	-	320	22

Tools

EPE 250

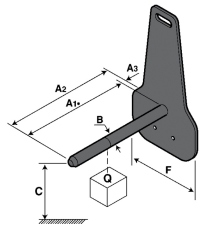

FA 250

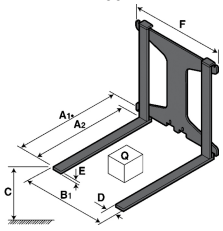

PLF 250

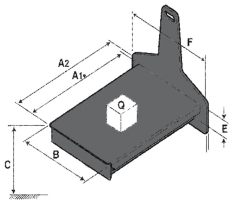

POT 250

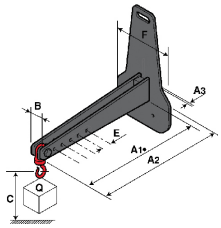

Head Office
B.P. 249 - 430 rue de l'Aubinière
44150 Ancenis Cedex - France
Tel: +33 (0)2 40 09 10 11 - Fax: +33 (0)2 40 09 10 97
www.manitou.com

This publication provides a description of the configuration versions and options for Manitou products, which may differ for equipment. The equipment presented in this brochure may be part of a series, as an option, or it may not be available, depending on the versions. Manitou reserves the right, at any time and without notice, to amend the specifications described and represented. The specifications provided do not bind the manufacturer. For more details, please contact your Manitou agent. This is not a contractually binding document. The presentation of the products is not contractually binding. List of specifications non-exhaustive. The logos as well as the visual identity of the company are owned by Manitou and cannot be used without authorisation. All rights reserved. The photos and diagrams contained in this brochure are only provided for consultation and information purposes.
MANITOU BF SA - Limited company with board of directors - Share capital: 39,668,399 euros - 857 802 508 RCS Nantes