Technical sheet :

# ES 820 LI

MANITOU
HANDLING YOUR WORLD

| | Technical characteristics | | Metric |
|---|---|---|---|
| 1.1 | Manufacturer | | Manitou |
| 1.2 | Model Name | | ES 820 LI |
| 1.3 | Power source | | Electrical - Lead |
| 1.4 | Operator type | | Pedestrian |
| 1.5 | Max. capacity | Q | 2000 kg |
| 1.51 | Nominal capacity on wrapover forks | Q | 2000 kg |
| 1.6 | Load center of gravity | c | 600 mm |
| 1.8 | Distance from Load backrest to center of rear axle | x | 716 mm |
| 1.9 | Wheelbase | y | 1509 mm |
| | **Weight** | | |
| 2.1 | Service weight | | 1800 kg |
| 2.2 | Weight on front axle (laden) / rear axle (laden) | | 1360 kg / 2500 kg |
| 2.3 | Weight on front axle (Unladen) / rear axle (Unladen) | | 1250 kg / 550 kg |
| | **Wheels** | | |
| 3.1 | Tires type | | Polyurethane cushion |
| 3.3 | Number of load wheels / Size of load wheels | | 4 / 82 x 68 |
| 3.4 | Number of castor wheels | | 1 |
| 3.4 | Number of stabilizer wheels / Size of the stabilizer wheels | | 2 / 120 x 50 |
| 3.5 | Number of front wheels / rear wheels | | 3 / 4 |
| 3.5.2 | Number of drive wheels / Size of drive wheels | | 1/254x100 |
| 3.6 | Front wheel gauge | b10 | 664 mm |
| 3.7 | Rear wheel gauge | b11 | 375 mm |
| | **Dimensions** | | |
| 4.15 | Fork height in low position | h13 | 86 mm |
| 4.19 | Overall length | l1 | 2123 mm |
| 4.20 | Length to face of forks | l2 | 973 mm |
| 4.21 | Overall width | b1 | 890 mm |
| 4.22 | Forks section / width / length | s / e / l | 70 mm / 200 mm / 1150 mm |
| 4.24 | Fork carriage width | b3 | 700 mm |
| 4.31 | Ground clearance below mast | m1 | 20 mm |
| 4.32 | Ground clearance at centre of wheelbase | m2 | 21 mm |
| 4.33 | Aisle Width for pallets 1000 x 1200 crossways | Ast | 2572 mm |
| 4.34 | Aisle width for 800 x 1200 pallet lengthways | Ast | 2531 mm |
| 4.6 | Initial lift | h5 | 110 mm |
| 4.35 | Turning radius | Wa | 1719 mm |
| 4.9 | Height tiller min. / max. | h14 / h14 | 900 mm / 1400 mm |
| | **Performances** | | |
| 5.1 | Travel speed (laden / unladen) | | 6 km/h / 6 km/h |
| 5.2 | Lifting speed (laden / unladen) | | 0.11 m/s / 0.20 m/s |
| 5.3 | Lowering speed (laden / unladen) | | 0.21 m/s / 0.22 m/s |
| 5.8 | Max Gradeability (laden / unladen) | | 6 % / 10 % |
| 5.10 | Service brake | | Electro magnetic |
| | **Engine** | | |
| 6.1 | Drive motor rating S2 60 min | | 2 kW |
| 6.2 | Lift motor rating at S3 15% | | 4 kW |
| 6.3 | Battery according to DIN 43531/35/36 A, B, C | | Traction |
| 6.4 | Battery voltage / capacity | | 24 V / 315 Ah |
| 6.5 | Battery weight (+/- 5%) | | 273 kg |
| | **Miscellaneous** | | |
| 8.1 | Type of drive control | | DC |
| 8.4 | Sound level at the driver's ear according to DIN 12 053 | | 65 dB |

## ES 820 LI - Dimensional drawing

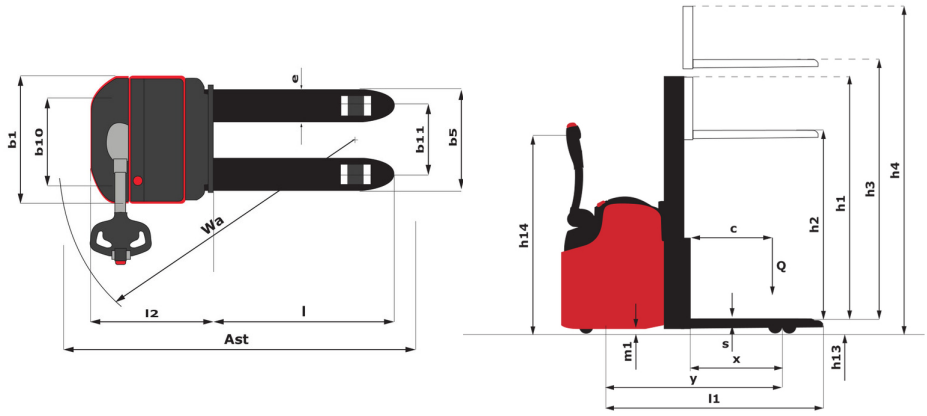

# Characteristics of masts and residual capacities

| Central Cylinder Simplex (CCS) | | CCS 15 | CCS 17 |
|---|---|---|---|
| h1 - Mast lowered height | mm | 1957 | 2207 |
| h3 - Mast lifting height | mm | 1500 | 1700 |
| h4 - Mast extended height | mm | 1963 | 2213 |
| Residual capacity at max height | kg | 2000 | 2000 |

| Full Visibility Duplex (FVD) | | FVD 29 | FVD 34 | FVD 38 |
|---|---|---|---|---|
| h1 - Mast lowered height | mm | 1957 | 2207 | 2407 |
| h3 - Mast lifting height | mm | 2900 | 3400 | 3800 |
| h4 - Mast extended height | mm | 3393 | 3893 | 4293 |
| Residual capacity at max height | kg | 1950 | 1600 | 1300 |

| Free Lift Duplex (FLD) | | FLD 29 | FLD 34 |
|---|---|---|---|
| h1 - Mast lowered height | mm | 1957 | 2207 |
| h2 - Mast free lift | mm | 1507 | 1757 |
| h3 - Mast lifting height | mm | 2900 | 3400 |
| h4 - Mast extended height | mm | 3388 | 3888 |
| Residual capacity at max height | kg | 1900 | 1550 |

| Free Lift Triplex (FLT) | | FLT 42 | FLT 47 | FLT 54 |
|---|---|---|---|---|
| h1 - Mast lowered height | mm | 1915 | 2075 | 2315 |
| h2 - Mast free lift | mm | 1472 | 1632 | 1882 |
| h3 - Mast lifting height | mm | 4200 | 4700 | 5400 |
| h4 - Mast extended height | mm | 4713 | 5193 | 5923 |
| Residual capacity at max height | kg | 950 | 750 | 500 |

**Head Office**
B.P. 249 - 430 rue de l'Aubinière
44150 Ancenis Cedex - France
Tel: +33 (0)2 40 09 10 11 - Fax: +33 (0)2 40 09 10 97
www.manitou.com

This publication provides a description of the configuration versions and options for Manitou products, which may differ for equipment. The equipment presented in this brochure may be part of a series, as an option, or it may not be available, depending on the versions. Manitou reserves the right, at any time and without notice, to amend the specifications described and represented. The specifications provided do not bind the manufacturer. For more details, please contact your Manitou agent. This is not a contractually binding document. The presentation of the products is not contractually binding. List of specifications non-exhaustive. The logos as well as the visual identity of the company are owned by Manitou and cannot be used without authorisation. All rights reserved. The photos and diagrams contained in this brochure are only provided for consultation and information purposes.
MANITOU BF SA - Limited company with board of directors - Share capital: 39,668,399 euros - 857 802 508 RCS Nantes