Technical sheet :

ES 410

MANITOU
HANDLING YOUR WORLD

	Technical characteristics		Metric
1.1	Manufacturer		Manitou
1.2	Model Name		ES 410
1.3	Power source		Electrical - Lead
1.4	Operator type		Pedestrian
1.5	Max. capacity	Q	1000 kg
1.6	Load center of gravity	c	600 mm
1.8	Distance from Load backrest to center of rear axle	x	723 mm
1.9	Wheelbase	y	1286 mm
	Weight		
2.1	Service weight		870 kg
2.2	Weight on front axle (laden) / rear axle (laden)		709 kg / 1161 kg
2.3	Weight on front axle (Unladen) / rear axle (Unladen)		609 kg / 261 kg
	Wheels		
3.1	Tires type		Polyurethane cushion
3.3	Number of load wheels / Size of load wheels		2 / 125x50
3.4	Number of stabilizer wheels / Size of the stabilizer wheels		1 / 125x50
3.5	Number of front wheels / rear wheels		2 / 2
3.5.2	Number of drive wheels / Size of drive wheels		1/230x70
3.6	Front wheel gauge	b10	517 mm
3.7	Rear wheel gauge	b11	380 mm
	Dimensions		
4.15	Fork height in low position	h13	85 mm
4.19	Overall length	l1	1875 mm
4.20	Length to face of forks	l2	725 mm
4.21	Overall width	b1	832 mm
4.22	Forks section / width / length	s / e / l	60 mm / 180 mm / 1150 mm
4.24	Fork carriage width	b3	680 mm
4.31	Ground clearance below mast	m1	35 mm
4.32	Ground clearance at centre of wheelbase	m2	30 mm
4.33	Aisle Width for pallets 1000 x 1200 crossways	Ast	2605 mm
4.34	Aisle Width for pallets 800 x 1200 crossways	Ast	2518 mm
4.35	Turning radius	Wa	1516 mm
4.9	Height tiller min. / max.	h14 / h14	920 mm / 1425 mm
	Performances		
5.1	Travel speed (laden / unladen)		6 km/h / 6 km/h
5.2	Lifting speed (laden / unladen)		0.14 m/s / 0.24 m/s
5.3	Lowering speed (laden / unladen)		0.30 m/s / 0.20 m/s
5.8	Max Gradeability (laden / unladen)		8 % / 10 %
5.10	Service brake		Electro magnetic
	Engine		
6.1	Drive motor rating S2 60 min		1.20 kW
6.2	Lift motor rating at S3 15%		3 kW
6.3	Battery according to DIN 43531/35/36 A, B, C		DIN 43535-B
6.4	Battery voltage / capacity		24 V / 160 Ah
6.5	Battery weight (+/- 5%)		165 kg
	Miscellaneous		
8.1	Type of drive control		AC
8.4	Sound level at the driver's ear according to DIN 12 053		65 dB

ES 410 - Dimensional drawing

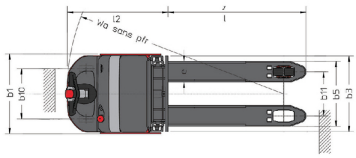

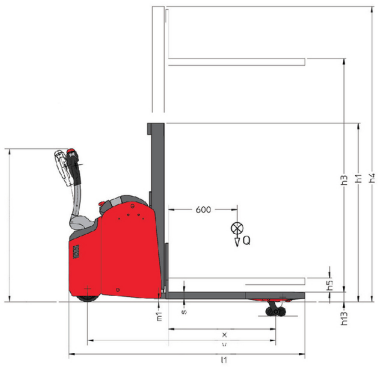

Characteristics of masts and residual capacities

Central Cylinder Duplex (CCD)		CCD 26	CCD 29	CCD 34
h1 - Mast lowered height	mm	1782	1932	2182
h2 - Mast free lift	mm	140	140	140
h3 - Mast lifting height	mm	2550	2850	3350
h4 - Mast extended height	mm	3068	3368	3868
Residual capacity at max height	kg	1000	1000	850

Central Cylinder Simplex (CCS)		CCS 15	CCS 17
h1 - Mast lowered height	mm	1932	2182
h2 - Mast free lift	mm	1420	1670
h3 - Mast lifting height	mm	1420	1670
h4 - Mast extended height	mm	1938	2188
Residual capacity at max height	kg	1000	1000

Full Visibility Duplex (FVD)		FVD 29	FVD 34	FVD 38
h1 - Mast lowered height	mm	1932	2182	2382
h3 - Mast lifting height	mm	2850	3350	3750
h4 - Mast extended height	mm	3368	3868	4268
Residual capacity at max height	kg	1000	950	750

Free Lift Duplex (FLD)		FLD 29	FLD 34
h1 - Mast lowered height	mm	1932	2182
h2 - Mast free lift	mm	1420	1670
h3 - Mast lifting height	mm	2845	3345
h4 - Mast extended height	mm	3363	3863
Residual capacity at max height	kg	1000	850

Free Lift Triplex (FLT)		FLT 42
h1 - Mast lowered height	mm	1890
h2 - Mast free lift	mm	1380
h3 - Mast lifting height	mm	4160
h4 - Mast extended height	mm	4678
Residual capacity at max height	kg	550

Head Office
B.P. 249 - 430 rue de l'Aubinière
44150 Ancenis Cedex - France
Tel: +33 (0)2 40 09 10 11 - Fax: +33 (0)2 40 09 10 97
www.manitou.com

This publication provides a description of the configuration versions and options for Manitou products, which may differ for equipment. The equipment presented in this brochure may be part of a series, as an option, or it may not be available, depending on the versions. Manitou reserves the right, at any time and without notice, to amend the specifications described and represented. The specifications provided do not bind the manufacturer. For more details, please contact your Manitou agent. This is not a contractually binding document. The presentation of the products is not contractually binding. List of specifications non-exhaustive. The logos as well as the visual identity of the company are owned by Manitou and cannot be used without authorisation. All rights reserved. The photos and diagrams contained in this brochure are only provided for consultation and information purposes.
MANITOU BF SA - Limited company with board of directors - Share capital: 39,668,399 euros - 857 802 508 RCS Nantes