Technical sheet :

ER 16 HD

MANITOU
HANDLING YOUR WORLD

	Technical characteristics		Metric
1.1	Manufacturer		MANITOU
1.2	Model Name		ER 16 HD
1.3	Power source		Electrical - Lead
1.4	Operator type		Seated
1.5	Max. capacity	Q	1600 kg
1.6	Load center of gravity	c	600 mm
1.8	Load distance, centre of drive axle to fork	x	306 mm
1.9	Wheelbase	y	1420 mm
	Weight		
2.1	Service weight		4150 kg
	Wheels		
3.1	Tires type		Polyurethane cushion
3.5.2	Number of drive wheels - Size of drive wheels		1 x 355 x 155
3.3	Number of load wheels - Size of load wheels		2 x 230 x 105
3.5	Number of front wheels / rear wheels		1 / 2
3.6	Front wheel gauge	b10	0 mm
3.7	Rear wheel gauge	b11	1128 mm
	Dimensions		
4.8	Seat height/stand height	h7	1077 mm
4.19	Overall length	l1	2485 mm
4.20	Length to face of forks	l2	1335 mm
4.21	Overall width	b1	1270 mm
4.22	Forks section / width / length	s / e / l	40 mm x 100 mm / 1150 mm
4.23	Fork carriage ISO 2328 (class/form) A/B		2A
4.26	Distance between wheel arms/loading surfaces	b4	903 mm
4.25.1	Width over forks min. / max.	b5	316 mm / 697 mm
4.32	Ground clearance at centre of wheelbase	m2	70 mm
4.33	Aisle width for 1000 x 1200 pallet lengthways		2758 mm
4.34	Aisle width for 800 x 1200 pallet lengthways	Ast	2820 mm
4.35	Turning radius	Wa	1640 mm
4.7	Height of overhead guard (cabin)	h6	2205 mm
	Performances		
5.1	Travel speed (laden / unladen)		14.30 km/h / 14.50 km/h
5.2	Lifting speed (laden / unladen)		0.47 m/s / 0.67 m/s
5.3	Lowering speed (laden / unladen)		0.52 m/s / 0.50 m/s
5.4.1	Reach speed (with load / without load)		0.20 m/s / 0.20 m/s
5.7	Gradeability (laden / unladen)		15.20 % / 11 %
5.10	Service brake		Electric
	Engine		
6.1	Drive motor rating S2 60 min		7.20 kW
6.2	Lift motor rating at S3 15%		15 kW
6.3	Battery according to DIN 43531/35/36 A, B, C		DIN 43531 C
6.4	Battery voltage / capacity		48 V / 620 Ah
6.5	Battery weight (+/- 5%)		920 kg
	Miscellaneous		
8.1	Type of drive control		Electronic
8.3	Oil flow rate for attachments		25 l/min
8.4	Sound level at the driver's ear according to DIN 12 053		60.80 dB

ER 16 HD - Dimensional drawing

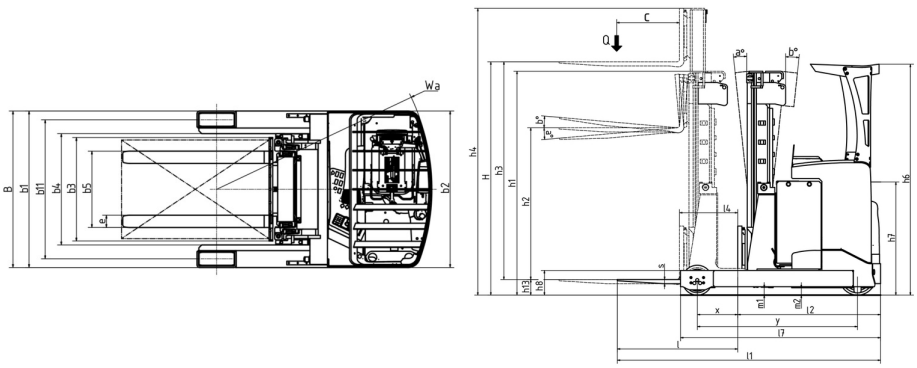

Characteristics of masts and residual capacities

Free Lift Triplex (FLT)		FLT 64	FLT 71	FLT 76	FLT 81	FLT 85	FLT 90	FLT 96	FLT 102	FLT 109
α - Mast/fork carriage tilt, forward	°	3	3	1	1	1	1	1	1	1
β - Mast/fork carriage tilt, backward	°	1	1	1	1	1	1	1	1	1
h1 - Mast lowered height	mm	2957	3190	3357	3523	3673	3823	4040	4240	440
h2 - Mast free lift	mm	2400	2650	2800	2900	3100	3200	3500	3700	3900
h3 - Mast lifting height	mm	6350	7050	7550	8050	8500	8950	9600	10200	10800
h4 - Mast extended height	mm	6930	7630	8130	8630	9080	9530	10180	10780	11380
Residual capacity with integrated side shift at max heigth	kg	1600	1600	1400	1300	1150	1000	800		

Head Office
B.P. 249 - 430 rue de l'Aubinière
44150 Ancenis Cedex - France
Tel: +33 (0)2 40 09 10 11 - Fax: +33 (0)2 40 09 10 97
www.manitou.com

This publication provides a description of the configuration versions and options for Manitou products, which may differ for equipment. The equipment presented in this brochure may be part of a series, as an option, or it may not be available, depending on the versions. Manitou reserves the right, at any time and without notice, to amend the specifications described and represented. The specifications provided do not bind the manufacturer. For more details, please contact your Manitou agent. This is not a contractually binding document. The presentation of the products is not contractually binding. List of specifications non-exhaustive. The logos as well as the visual identity of the company are owned by Manitou and cannot be used without authorisation. All rights reserved. The photos and diagrams contained in this brochure are only provided for consultation and information purposes.
MANITOU BF SA - Limited company with board of directors - Share capital: 39,668,399 euros - 857 802 508 RCS Nantes