Technical sheet :

ER 14

MANITOU
HANDLING YOUR WORLD

	Technical characteristics		Metric
1.1	Manufacturer		MANITOU
1.2	Model Name		ER 14
1.3	Power source		Electrical - Lead
1.4	Operator type		Seated
1.5	Max. capacity	Q	1400 kg
1.6	Load center of gravity	c	600 mm
1.8	Load distance, centre of drive axle to fork	x	307 mm
1.9	Wheelbase	y	1378 mm
	Weight		
2.1	Service weight		2710 kg
	Wheels		
3.1	Tires type		Polyurethane cushion
3.5.2	Number of drive wheels - Size of drive wheels		1 x 355 x 155
3.3	Number of load wheels - Size of load wheels		2 x 220 x 85
3.5	Number of front wheels / rear wheels		1 / 2
3.6	Front wheel gauge	b10	0 mm
3.7	Rear wheel gauge	b11	995 mm
	Dimensions		
4.8	Seat height/stand height	h7	1077 mm
4.19	Overall length	l1	2413 mm
4.20	Length to face of forks	l2	1263 mm
4.21	Overall width	b1	1120 mm
4.22	Forks section / width / length	s / e / l	40 mm x 100 mm / 1150 mm
4.23	Fork carriage ISO 2328 (class/form) A/B		2A
4.26	Distance between wheel arms/loading surfaces	b4	900 mm
4.25.1	Width over forks min. / max.	b5	316 mm / 697 mm
4.32	Ground clearance at centre of wheelbase	m2	70 mm
4.33	Aisle width for 1000 x 1200 pallet lengthways		2701 mm
4.34	Aisle width for 800 x 1200 pallet lengthways	Ast	2768 mm
4.35	Turning radius	Wa	1598 mm
4.7	Height of overhead guard (cabin)	h6	2205 mm
	Performances		
5.1	Travel speed (laden / unladen)		12.30 km/h / 12.50 km/h
5.2	Lifting speed (laden / unladen)		0.49 m/s / 0.65 m/s
5.3	Lowering speed (laden / unladen)		0.59 m/s / 0.55 m/s
5.4.1	Reach speed (with load / without load)		0.20 m/s / 0.20 m/s
5.7	Gradeability (laden / unladen)		7.50 % / 11.10 %
5.10	Service brake		Electric
	Engine		
6.1	Drive motor rating S2 60 min		5.90 kW
6.2	Lift motor rating at S3 15%		11 kW
6.3	Battery according to DIN 43531/35/36 A, B, C		DIN43531 B
6.4	Battery voltage / capacity		48 V / 465 Ah
6.5	Battery weight (+/- 5%)		731 kg
	Miscellaneous		
8.1	Type of drive control		Electronic
8.3	Oil flow rate for attachments		25 l/min
8.4	Sound level at the driver's ear according to DIN 12 053		57.40 dB

ER 14 - Dimensional drawing

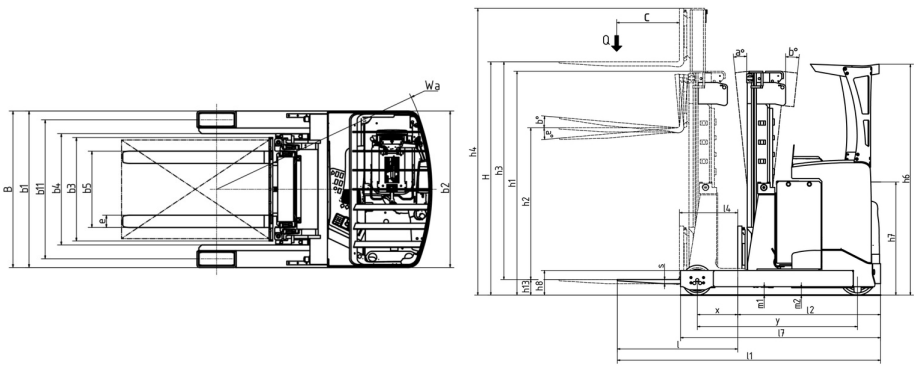

Characteristics of masts and residual capacities

Free Lift Triplex (FLT)		FLT 48	FLT 54	FLT 57	FLT 63	FLT 68	FLT 73
α - Mast/fork carriage tilt, forward	°	3	3	3	3	3	3
β - Mast/fork carriage tilt, backward	°	1	1	1	1	1	1
h1 - Mast lowered height	mm	2140	2340	2440	2640	2790	2957
h2 - Mast free lift	mm	1600	1800	1900	2100	2250	2417
h3 - Mast lifting height	mm	4800	5400	5700	6300	6800	7300
h4 - Mast extended height	mm	5380	5980	6280	6880	7330	7830
Residual capacity with integrated side shift at max heigth	kg	1400	1400	1400	1000	700	

Head Office
B.P. 249 - 430 rue de l'Aubinière
44150 Ancenis Cedex - France
Tel: +33 (0)2 40 09 10 11 - Fax: +33 (0)2 40 09 10 97
www.manitou.com

This publication provides a description of the configuration versions and options for Manitou products, which may differ for equipment. The equipment presented in this brochure may be part of a series, as an option, or it may not be available, depending on the versions. Manitou reserves the right, at any time and without notice, to amend the specifications described and represented. The specifications provided do not bind the manufacturer. For more details, please contact your Manitou agent. This is not a contractually binding document. The presentation of the products is not contractually binding. List of specifications non-exhaustive. The logos as well as the visual identity of the company are owned by Manitou and cannot be used without authorisation. All rights reserved. The photos and diagrams contained in this brochure are only provided for consultation and information purposes.
MANITOU BF SA - Limited company with board of directors - Share capital: 39,668,399 euros - 857 802 508 RCS Nantes