Technical sheet :

# ER 12

MANITOU
HANDLING YOUR WORLD

| | Technical characteristics | | Metric |
|---|---|---|---|
| 1.1 | Manufacturer | | Manitou |
| 1.2 | Model Name | | ER 12 |
| 1.3 | Power source | | Electrical - Lead |
| 1.4 | Operator type | | Seated |
| 1.5 | Max. capacity | Q | 1200 kg |
| 1.6 | Load center of gravity | c | 600 mm |
| 1.8 | Load distance, centre of drive axle to fork | x | 335 mm |
| 1.9 | Wheelbase | y | 1378 mm |
| | **Weight** | | |
| 2.1 | Service weight | | 2580 kg |
| | **Wheels** | | |
| 3.1 | Tires type | | Polyurethane cushion |
| 3.5.2 | Number of drive wheels - Size of drive wheels | | 1 x 355 x 155 |
| 3.3 | Number of load wheels - Size of load wheels | | 2 x 220 x 85 |
| 3.5 | Number of front wheels / rear wheels | | 1 / 2 |
| 3.6 | Front wheel gauge | b10 | 0 mm |
| 3.7 | Rear wheel gauge | b11 | 995 mm |
| | **Dimensions** | | |
| 4.8 | Seat height/stand height | h7 | 1077 mm |
| 4.19 | Overall length | l1 | 2413 mm |
| 4.20 | Length to face of forks | l2 | 1263 mm |
| 4.21 | Overall width | b1 | 1120 mm |
| 4.22 | Forks section / width / length | s / e / l | 40 mm x 100 mm / 1150 mm |
| 4.23 | Fork carriage ISO 2328 (class/form) A/B | | 2A |
| 4.26 | Distance between wheel arms/loading surfaces | b4 | 900 mm |
| 4.25.1 | Width over forks min. / max. | b5 | 316 mm / 697 mm |
| 4.32 | Ground clearance at centre of wheelbase | m2 | 70 mm |
| 4.33 | Aisle width for 1000 x 1200 pallet lengthways | | 2694 mm |
| 4.34 | Aisle width for 800 x 1200 pallet lengthways | Ast | 2751 mm |
| 4.35 | Turning radius | Wa | 1598 mm |
| 4.7 | Height of overhead guard (cabin) | h6 | 2205 mm |
| | **Performances** | | |
| 5.1 | Travel speed (laden / unladen) | | 12.30 km/h / 12.50 km/h |
| 5.2 | Lifting speed (laden / unladen) | | 0.50 m/s / 0.65 m/s |
| 5.3 | Lowering speed (laden / unladen) | | 0.58 m/s / 0.55 m/s |
| 5.4.1 | Reach speed (with load / without load) | | 0.20 m/s / 0.20 m/s |
| 5.7 | Gradeability (laden / unladen) | | 7.50 % / 11.10 % |
| 5.10 | Service brake | | Electric |
| | **Engine** | | |
| 6.1 | Drive motor rating S2 60 min | | 5.90 kW |
| 6.2 | Lift motor rating at S3 15% | | 11 kW |
| 6.3 | Battery according to DIN 43531/35/36 A, B, C | | DIN43531 B |
| 6.4 | Battery voltage / capacity | | 48 V / 310 Ah |
| 6.5 | Battery weight (+/- 5%) | | 730 kg |
| | **Miscellaneous** | | |
| 8.1 | Type of drive control | | Electronic |
| 8.3 | Oil flow rate for attachments | | 25 l/min |
| 8.4 | Sound level at the driver's ear according to DIN 12 053 | | 57.40 dB |

## ER 12 - Dimensional drawing

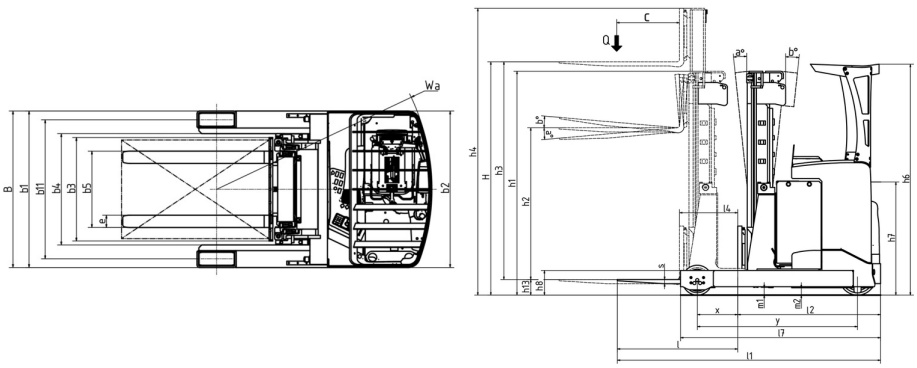

# Characteristics of masts and residual capacities

| Free Lift Triplex (FLT) | | FLT 48 | FLT 54 | FLT 57 | FLT 63 | FLT 68 |
|---|---|---|---|---|---|---|
| α - Mast/fork carriage tilt, forward | ° | 3 | 3 | 3 | 3 | 3 |
| β - Mast/fork carriage tilt, backward | ° | 1 | 1 | 1 | 1 | 1 |
| h1 - Mast lowered height | mm | 2140 | 2340 | 2440 | 2640 | 2790 |
| h2 - Mast free lift | mm | 1600 | 1800 | 1900 | 2100 | 2250 |
| h3 - Mast lifting height | mm | 4800 | 5400 | 5700 | 6300 | 6800 |
| h4 - Mast extended height | mm | 5380 | 5980 | 6280 | 6880 | 7330 |
| Residual capacity with integrated side shift at max heigth | kg | 1200 | 1200 | 1200 | 1000 | 700 |

**Head Office**
B.P. 249 - 430 rue de l'Aubinière
44150 Ancenis Cedex - France
Tel: +33 (0)2 40 09 10 11 - Fax: +33 (0)2 40 09 10 97
www.manitou.com

This publication provides a description of the configuration versions and options for Manitou products, which may differ for equipment. The equipment presented in this brochure may be part of a series, as an option, or it may not be available, depending on the versions. Manitou reserves the right, at any time and without notice, to amend the specifications described and represented. The specifications provided do not bind the manufacturer. For more details, please contact your Manitou agent. This is not a contractually binding document. The presentation of the products is not contractually binding. List of specifications non-exhaustive. The logos as well as the visual identity of the company are owned by Manitou and cannot be used without authorisation. All rights reserved. The photos and diagrams contained in this brochure are only provided for consultation and information purposes.
MANITOU BF SA - Limited company with board of directors - Share capital: 39,668,399 euros - 857 802 508 RCS Nantes