Technical sheet :

CONCRETE SKIP

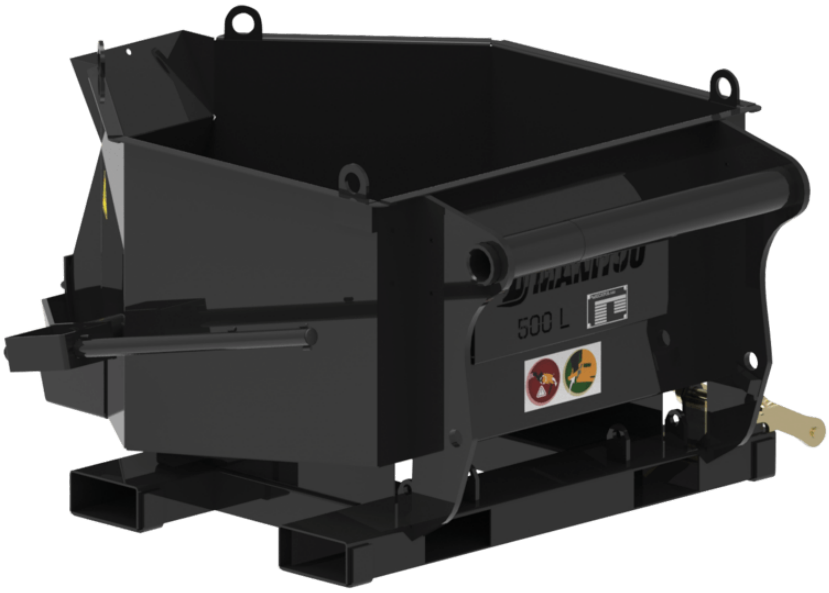

Technical characteristics

- 500 L / 18 ft³ capacity.
- Carriage mounted (front position) or fork mounted (front and side unloading).
- Fork sleeves: 170 x 75 mm / 7 in x 3 in.
- Safety: attachment equipped with a fork lock system.
- Well-protected components.
- BBHG 500 MRT: equipped with a counterbalance valve.

Customer benefits

- Skip adapted to the needs of construction professionals.
- Compact attachment allowing work in window openings.
- Multi-purpose, for concrete and mortar.
- Optional: hydraulic opening for a controlled unloading ("H").
- Optional: flexible tube ("G") (1 m / 3 ft, ø200 mm / 8 in) for excellent accuracy.

Technical characteristics		BB 500	BB 500 MRT	BBG 500	BBH 500	BBHG 500	BBHG 500 MRT
Distance to center of gravity (mm)		556	555	598	578	618	621
Capacities							
Capacity (kg)		1200	1200	1200	1200	1200	1200
Heaped capacity (l)		500	500	500	500	500	500
Weight							
Overall weight (kg)		191	191	201	200	210	211
Weight and dimensions							
Overall height (mm)	h17	776	776	776	776	776	776
Overall length (mm)	l1	1466	1466	1466	1466	1466	1466
Width (mm)		1216	1216	1220	1110	1110	1110
Working Parameters							
Required machine equipment							
Opening type		Manual	Manual	Manual	Hydraulic	Hydraulic	Hydraulic
Flexible tube		No	No	Yes	No	Yes	Yes

Machines compatibility	BB 500	BB 500 MRT	BBG 500	BBH 500	BBHG 500	BBHG 500 MRT
Reference number	52000637	-	52000639	52000638	52000640	-
MT 420 H	X	-	-	X	-	-
MT 625 e	-	-	X	X	X	-
MT 625 H	X	-	X	X	X	-
MT 625 H Comfort	X	-	X	X	X	-
MT 625 HA	X	-	X	X	X	-
MT 730 H	X	-	X	X	X	-
MT 735 75D ST5	X	-	X	X	X	-
MT 930 H	X	-	X	X	X	-
MT 930 HA	X	-	X	X	X	-
MT 935 75D ST5	X	-	X	X	X	-
MT 1135 75 D	X	-	X	X	X	-
MT 1135	X	-	X	X	X	-
MT 1135 H 100D	X	-	X	X	X	-
MT 1135 H easy ST5	X	-	X	X	X	-
MT 1135 ST5	X	-	X	X	X	-
MT 1335 75D ST5	X	-	X	X	X	-
MT 1335 100D ST5	X	-	X	X	X	-
MT 1335	X	-	X	X	X	-
MT 1335 H 75D ST5	X	-	X	X	X	-
MT 1335 H 100D ST5	X	-	X	X	X	-
MT 1335 HA 75D ST5	X	-	X	X	X	-
MT 1335 HA 100D ST5	X	-	X	X	X	-
MT 1335 ST5	X	-	X	X	X	-
MT 1440	X	-	X	X	X	-
MT 1440 A	X	-	X	X	X	-
MT 1440 e	X	-	X	X	X	-
MT 1440 HA	X	-	X	X	X	-
MT 1840	X	-	X	X	X	-
MT 1840 A	X	-	X	X	X	-
MT 1840 e	X	-	X	X	X	-
MT 1840 HA	X	-	X	X	X	-
MT-X 735	X	-	X	X	X	-
MT-X 1135	-	-	X	X	X	-
MT-X 1440	X	-	X	X	X	-
MT-X 1440 A	X	-	X	X	X	-
MT-X 1840	X	-	X	X	X	-
MT-X 1840 A	X	-	X	X	X	-
MXT 840 P	X	-	-	-	-	-
MXT 1740 P	X	-	-	-	-	-
MT 733 Easy OLD	X	-	X	X	X	-
MT 933 Easy OLD	X	-	-	-	X	-
MT 1033 easy OLD	X	-	X	X	X	-
Reference number E-RECO	-	52000642	-	-	-	52000643
MRT 1645 75	-	X	-	-	-	X
MRT 1645 115	-	X	-	-	-	X
MRT 1845 75	-	X	-	-	-	X
MRT 1845 115	-	X	-	-	-	X
MRT 2145 115	-	X	-	-	-	X
MRT 2260	-	X	-	-	-	X
MRT 2260 e	-	X	-	-	-	X
MRT 2545 115	-	X	-	-	-	X
MRT 2570	-	X	-	-	-	X
MRT 2660	-	X	-	-	-	X
MRT 2660 e	-	X	-	-	-	X
MRT 3060	-	X	-	-	-	X
MRT 3570	-	X	-	-	-	X
MRT 3570 ES	-	X	-	-	-	X
MRT-X 1645	-	X	-	-	-	X
MRT-X 1840 Easy 360°	-	X	-	-	-	X
MRT-X 1840 Easy 400°	-	X	-	-	-	X
MRT-X 1845	-	X	-	-	-	X
MRT-X 2145	-	X	-	-	-	X

Machines compatibility	BB 500	BB 500 MRT	BBG 500	BBH 500	BBHG 500	BBHG 500 MRT
MRT-X 2150 Privilege Plus	-	X	-	-	-	X
MRT-X 2260	-	X	-	-	-	X
MRT-X 2470 Privilege Plus	-	X	-	-	-	X
MRT-X 2545	-	X	-	-	-	X
MRT-X 2545 Easy 360°	-	X	-	-	-	X
MRT-X 2545 Easy 400°	-	X	-	-	-	X
MRT-X 2550 Privilege Plus	-	X	-	-	-	X
MRT-X 2570	-	X	-	-	-	X
MRT-X 2660	-	X	-	-	-	X
MRT-X 3050 Privilege Plus	-	X	-	-	-	X
MRT-X 3060	-	X	-	-	-	X
MRT-X 3570	-	X	-	-	-	X
MRT-X 3570 ES	-	X	-	-	-	X
MRT 1640 Easy T4 S2 360° OLD	-	X	-	-	-	X
MRT 1840 Easy T4 S2 360° OLD	-	X	-	-	-	X
MRT 1840 Easy T4 S2 400° OLD	-	X	-	-	-	X
MRT 2145 Easy T4 S2 360° OLD	-	X	-	-	-	X
MRT 2145 Easy T4 S2 400° OLD	-	X	-	-	-	X
MRT 2150 Privilege Plus OLD	-	X	-	-	-	X
MRT 2470 Privilege Plus OLD	-	X	-	-	-	X
MRT 2545 Easy T4 S2 360° OLD	-	X	-	-	-	X
MRT 2545 Easy T4 S2 400° OLD	-	X	-	-	-	X
MRT 2550 Privilege Plus OLD	-	X	-	-	-	X
MRT 3050 Privilege Plus OLD	-	X	-	-	-	X

TABLE SYMBOL					
	No predisposition required		Hydraulic line		Return piping to hydraulic oil tank
	Electric predisposition		Platform predisposition		Tyre handler, cylinder handler predisposition

MANITOU
HANDLING YOUR WORLD

Head Office
B.P. 249 - 430 rue de l'Aubinière
44150 Ancenis Cedex - France
Tel: +33 (0)2 40 09 10 11 - Fax: +33 (0)2 40 09 10 97
www.manitou.com

This publication provides a description of the configuration versions and options for Manitou products, which may differ for equipment. The equipment presented in this brochure may be part of a series, as an option, or it may not be available, depending on the versions. Manitou reserves the right, at any time and without notice, to amend the specifications described and represented. The specifications provided do not bind the manufacturer. For more details, please contact your Manitou agent. This is not a contractually binding document. The presentation of the products is not contractually binding. List of specifications non-exhaustive. The logos as well as the visual identity of the company are owned by Manitou and cannot be used without authorisation. All rights reserved. The photos and diagrams contained in this brochure are only provided for consultation and information purposes.
MANITOU BF SA - Limited company with board of directors - Share capital: 39,668,399 euros - 857 802 508 RCS Nantes