Technical sheet :

BIG BAG HANDLER

Technical characteristics

- Max. total capacity of 4000 kg / 8820 lb with 4 loading points with 1000 kg / 2205 lb capacity each.
- 4 bag stoppers mounted on each loading point- limit the risk of bag falling.
- Anti-swing bag stabilizer, increases stability.

Customer benefits

- Increases efficiency & safety of big bag handling.
- Main structure made of tubes- limits the risk of bag damages & fall.
- Elevated structure- prevents any damage of trailer's roof while loading.
- Handles indifferently big bags with 1, 2 or 4 ears.

Technical characteristics		HBB 1500 / 2400	HBB 2100 / 4000
Distance to center of gravity (mm)		388	459
Capacities			
Capacity (kg)		2400	4000
Weight			
Overall weight (kg)		186	285
Weight and dimensions			
Overall height (mm)	h17	1322	1322
Overall length (mm)	l1	1643	2181
Forks spread (mm)	b5	750	700
Width (mm)		1356	1356
Working Parameters			
Required machine equipment		X	X

Machines compatibility	HBB 1500 / 2400	HBB 2100 / 4000
Reference number	52781808	52691660
Skid Steer Carriage reference	52578030	-
4 point Carriage	52742058	-
Euro Carriage	52742059	-
ALT950	X	-
GCT 3-14	X	-
GCT 3-14 +	X	-
MLA-T 533-145 V+ - ST5	X	-
MLT 420-60 H	X	-
MLT 625-75 H	X	-
MLT 625 e	X	-
MLT 630-115 (S1)	X	-
MLT 630-115 (S2)	X	-
MLT 630-115 V (S1)	X	-
MLT 630-115 V (S2)	X	-
MLT 630-115 V CP (S1)	X	-
MLT 630-115 V CP (S2)	X	-
MLT 635-130 PS+ (S1)	X	-
MLT 635-130 PS+ (S2)	X	-
MLT 635-140 V+ (S1)	X	-
MLT 635-140 V+ (S2)	X	-
MLT 730-115 V (S1)	X	-
MLT 730-115 V (S2)	X	-
MLT 730-115 V CP (S1)	X	-
MLT 730-115 V CP (S2)	X	-
MLT 733-115	X	-
MLT 733-115 (S2)	X	-
MLT 733-115 LSU (S1)	X	-
MLT 737-130 PS+ (S1)	X	-
MLT 738-130 PS+ (S1)	X	-
MLT 741-130 PS+ (S1)	X	-
MLT 742-130 PS+ (S1)	X	X
MLT 742-140 V+ (S1)	X	X
MLT 841-145 PS+	X	-
MLT 850-145 V+	X	X
MLT 937-115 (S1)	X	-
MLT 940-140 V+ (S1)	X	-
MLT 940-140 V+ (S2)	X	-
MLT 961-160 V+ L	X	X
MLT 1041-145 PS+L	X	-
MLT-X 625-75 H	X	-
MLT-X 732	X	-
MLT-X 735 T LSU	X	-
MLT-X 737-130 PS+ (S2)	X	-
MLT-X 738-130 PS+ (S1)	X	-
MLT-X 741 T LSU	X	-
MLT-X 841 - 145 PS+	X	-
MLT-X 850-145 V+	X	X
MLT-X 961-160 V+ L	X	X
MLT-X 1041-145 PS+L	X	-
MT 420 H	X	-
MT 625 e	X	-
MT 625 H	X	-
MT 625 H Comfort	X	-
MT 625 HA	X	-
MT 735 75D ST5	X	-
MT 935 75D ST5	X	-
MT 1135 75 D	X	-
MT 1135	X	-
MT 1135 H 100D	X	-
MT 1135 H easy ST5	X	-
MT 1135 ST5	X	-
MT 1335 75D ST5	X	-
MT 1335 100D ST5	X	-
MT 1335	X	-

Machines compatibility	HBB 1500 / 2400	HBB 2100 / 4000
MT 1335 H 75D ST5	X	-
MT 1335 H 100D ST5	X	-
MT 1335 HA 75D ST5	X	-
MT 1335 HA 100D ST5	X	-
MT 1335 ST5	X	-
MT 1440	X	-
MT 1440 A	X	-
MT 1440 e	X	-
MT 1440 HA	X	-
MT 1840	X	-
MT 1840 A	X	-
MT 1840 e	X	-
MT 1840 HA	X	-
MT-X 735	X	-
MT-X 1135	X	-
MT-X 1440	X	-
MT-X 1440 A	X	-
MT-X 1840	X	-
MT-X 1840 A	X	-
MXT 840 P	X	-
MXT 1740 P	X	-
ULM 412 H	X	-
ULM 412 H	X	-
ULM 415 H	X	-
ULM 415 H	X	-
MLT 630-105 ST4 OLD	X	-
MLT 630-105 V CP ST4 OLD	X	-
MLT 630-105 V ST4 OLD	X	-
MLT 635-130 PS+ ST4 OLD	X	-
MLT 635-140 V+ ST4 OLD	X	-
MLT 730-115 V CP ST4 OLD	X	-
MLT 730-115 V ST4 OLD	X	-
MLT 733-115 LSU ST4 OLD	X	-
MLT 733-115 ST4 OLD	X	-
MLT 737-130 PS+ ST4 OLD	X	-
MLT 741-140 V+ ST4 OLD	X	-
MLT 840-145 PS+ OLD	X	-
MLT 845-100 H OLD	X	-
MLT 845-120 OLD	X	-
MLT 940-140 V+ ST4 OLD	X	-
MLT 961-145 V+ L OLD	X	X
MLT 1040-145 PS+ L OLD	X	-
MLT-X 737-130 PS+ OLD	X	-
MLT-X 741-140 V+ S1 OLD	X	-
MLT-X 840-140 PS+ OLD	X	-
MLT-X 845-120 OLD	X	-
MLT-X 845-120 H OLD	X	-
MLT-X 961-145 V+ L OLD	X	X
MLT-X 1035 LT LSU OLD	X	-
MLT-X 1040-140 PS+ L OLD	X	-
MT 733 Easy OLD	X	-
MT 933 Easy OLD	X	-
MT 1033 easy OLD	X	-
MT-X 733 OLD	X	-
MT-X 1033 OLD	X	-
Reference number E-RECO	931627	-
MRT 1645 75	X	-
MRT 1645 115	X	-
MRT 1845 75	X	-
MRT 1845 115	X	-
MRT 2145 115	X	-
MRT 2260	X	-
MRT 2260 e	X	-
MRT 2545 115	X	-
MRT 2570	X	-
MRT 2660	X	-
MRT 2660 e	X	-
MRT 3060	X	-
MRT 3570	X	-
MRT 3570 ES	X	-
MRT-X 1645	X	-
MRT-X 1845	X	-
MRT-X 2145	X	-
MRT-X 2260	X	-
MRT-X 2470 Privilege Plus	X	-
MRT-X 2545	X	-
MRT-X 2570	X	-
MRT-X 2660	X	-
MRT-X 3050 Privilege Plus	X	-
MRT-X 3060	X	-

Machines compatibility	HBB 1500 / 2400	HBB 2100 / 4000
MRT-X 3255 Privilege Plus	X	-
MRT-X 3570	X	-
MRT-X 3570 ES	X	-
MRT 1640 Easy T4 S2 360° OLD	X	-
MRT 1640 Easy T4 S2 400° OLD	X	-
MRT 1840 Easy T4 S2 360° OLD	X	-
MRT 1840 Easy T4 S2 400° OLD	X	-
MRT 2145 Easy T4 S2 360° OLD	X	-
MRT 2145 Easy T4 S2 400° OLD	X	-
MRT 2470 Privilege Plus OLD	X	-
MRT 2545 Easy T4 S2 360° OLD	X	-
MRT 2545 Easy T4 S2 400° OLD	X	-
MRT 3050 Privilege Plus OLD	X	-
MRT 3255 Privilege Plus OLD	X	-

TABLE SYMBOL					
	No predisposition required		Hydraulic line		Return piping to hydraulic oil tank
	Electric predisposition		Platform predisposition		Tyre handler, cylinder handler predisposition

Big Bag Handler - Dimensional drawing

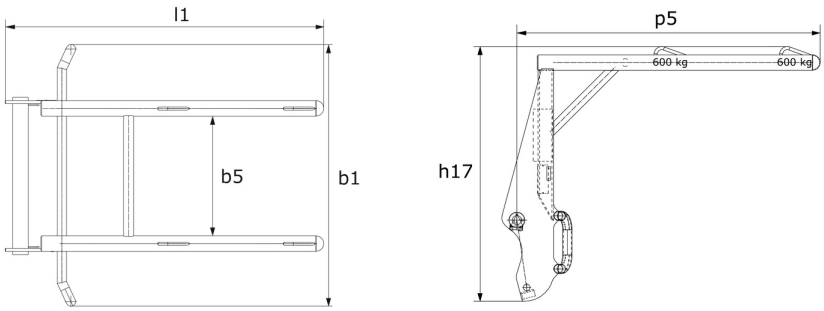

Head Office
B.P. 249 - 430 rue de l'Aubinière
44150 Ancenis Cedex - France
Tel: +33 (0)2 40 09 10 11 - Fax: +33 (0)2 40 09 10 97
www.manitou.com

This publication provides a description of the configuration versions and options for Manitou products, which may differ for equipment. The equipment presented in this brochure may be part of a series, as an option, or it may not be available, depending on the versions. Manitou reserves the right, at any time and without notice, to amend the specifications described and represented. The specifications provided do not bind the manufacturer. For more details, please contact your Manitou agent. This is not a contractually binding document. The presentation of the products is not contractually binding. List of specifications non-exhaustive. The logos as well as the visual identity of the company are owned by Manitou and cannot be used without authorisation. All rights reserved. The photos and diagrams contained in this brochure are only provided for consultation and information purposes.
MANITOU BF SA - Limited company with board of directors - Share capital: 39,668,399 euros - 857 802 508 RCS Nantes