Technical sheet :

BALE CLAMP CLASSIC

Technical characteristics

- 2x4 or 2x3 teeth.
- Synchronized closure.
- Excellent lifting capacity of 1000 kg / 2205 lb or 1200 kg / 2646 lb at 800 mm / 31 lb.
- Handles 1 round bales Ø 1,8 m / 6 ft max. for the 2x4 and Ø 1,5 m / 5 ft to 2 m / 7 ft for the 2x3.
- Handles 2 rectangular bales of maximum 0,8 m / 3 ft high per bale.

  [The 3D picture at the top of this page is the reference CLBR 2x3 - 52001013].

Customer benefits

- Easy to use and efficient attachment.
- Handles 1 round bale or 2 rectangular bales at the same time.
- Rounded teeth in wrought iron that offer an accurate and clean penetration on materials.
- Optional: 2 lower teeth (680 mm / 27 in, Ø 35 mm / 1 in) that ensure a perfect stability while handling rectangular bales.

Capacities		CLBR 2x3	PBG 2x4
Capacity (kg)		1200	1800
Weight			
Overall weight (kg)		235	235
Weight and dimensions			
Overall height (mm)	h17	1382	1381
Overall length (mm)	l1	1082	1031
Forks length (mm)	l	335	335
Width (mm)		1090	1090
Arm length (mm)		700	600
Working Parameters			
Required machine equipment			
Teeth / Fingers		2 / 3	2 / 4
Minimum opening (mm)		186	112
Maximum opening (mm)		1960	1770
Minimum forks spread (mm)	b5	335	350

Machines compatibility	CLBR 2x3	PBG 2x4
Reference number	52001013	757612
ALT950	X	X
MLA-T 533-145 V+ - ST5	X	X
MLT 420-60 H	X	X
MLT 625-75 H	X	X
MLT 625 e	X	X
MLT 630-115 (S1)	X	X
MLT 630-115 (S2)	X	X
MLT 630-115 V (S1)	X	X
MLT 630-115 V (S2)	X	X
MLT 630-115 V CP (S1)	X	X
MLT 630-115 V CP (S2)	X	X
MLT 635-130 PS+ (S1)	X	X
MLT 635-130 PS+ (S2)	X	X
MLT 635-140 V+ (S1)	X	X
MLT 635-140 V+ (S2)	X	X
MLT 730-115 V (S1)	X	X
MLT 730-115 V (S2)	X	X
MLT 730-115 V CP (S1)	X	X
MLT 730-115 V CP (S2)	X	X
MLT 733-115	X	X
MLT 733-115 (S2)	X	X
MLT 733-115 LSU (S1)	X	X
MLT 737-130 PS+ (S1)	X	X
MLT 738-130 PS+ (S1)	X	X
MLT 741-130 PS+ (S1)	X	X
MLT 741-140 V+ (S1)	X	X
MLT 742-130 PS+ (S1)	X	X
MLT 742-140 V+ (S1)	X	X
MLT 841-145 PS+	X	X
MLT 850-145 V+	X	X
MLT 940-140 V+ (S1)	X	X
MLT 940-140 V+ (S2)	X	X
MLT 961-160 V+ L	X	X
MLT 1041-145 PS+L	X	X
MLT-X 625-75 H	X	X
MLT-X 732	X	X
MLT-X 735 T LSU	X	X
MLT-X 738-130 PS+ (S1)	-	X
MLT-X 741 T LSU	X	X
MLT-X 841 - 145 PS+	X	X
MLT-X 850-145 V+	X	X
MLT-X 961-160 V+ L	X	X
MLT-X 1041-145 PS+L	X	X
MLT 630-105 ST4 OLD	X	X
MLT 630-105 V CP ST4 OLD	X	X
MLT 630-105 V ST4 OLD	X	X
MLT 635-130 PS+ ST4 OLD	X	X
MLT 635-140 V+ ST4 OLD	X	X
MLT 730-115 V CP ST4 OLD	X	X
MLT 730-115 V ST4 OLD	X	X
MLT 733-115 LSU ST4 OLD	X	X
MLT 733-115 ST4 OLD	X	X
MLT 737-130 PS+ ST4 OLD	X	X
MLT 741-140 V+ ST4 OLD	X	X
MLT 840-145 PS+ OLD	X	X
MLT 845-100 H OLD	X	X
MLT 845-120 OLD	X	X
MLT 940-140 V+ ST4 OLD	X	X
MLT 961-145 V+ L OLD	X	X
MLT 1040-145 PS+ L OLD	X	X
MLT-X 737-130 PS+ OLD	X	X

Machines compatibility	CLBR 2x3	PBG 2x4
MLT-X 737-130 PS+ (S2) OLD	X	X
MLT-X 741-140 V+ S1 OLD	X	X
MLT-X 840-140 PS+ OLD	X	X
MLT-X 845-120 OLD	X	X
MLT-X 845-120 H OLD	X	X
MLT-X 961-145 V+ L OLD	X	X
MLT-X 1040-140 PS+ L OLD	X	X

TABLE SYMBOL					
	No predisposition required		Hydraulic line		Return piping to hydraulic oil tank
	Electric predisposition		Platform predisposition		Tyre handler, cylinder handler predisposition

Bale clamp classic - Dimensional drawing

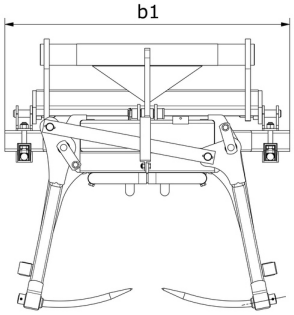

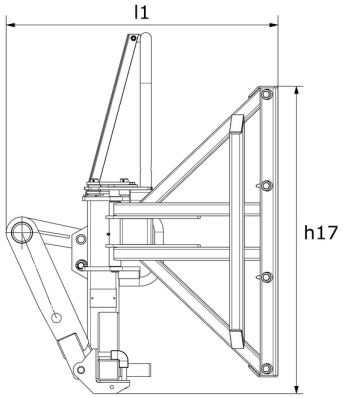

Head Office
B.P. 249 - 430 rue de l'Aubinière
44150 Ancenis Cedex - France
Tel: +33 (0)2 40 09 10 11 - Fax: +33 (0)2 40 09 10 97
www.manitou.com

This publication provides a description of the configuration versions and options for Manitou products, which may differ for equipment. The equipment presented in this brochure may be part of a series, as an option, or it may not be available, depending on the versions. Manitou reserves the right, at any time and without notice, to amend the specifications described and represented. The specifications provided do not bind the manufacturer. For more details, please contact your Manitou agent. This is not a contractually binding document. The presentation of the products is not contractually binding. List of specifications non-exhaustive. The logos as well as the visual identity of the company are owned by Manitou and cannot be used without authorisation. All rights reserved. The photos and diagrams contained in this brochure are only provided for consultation and information purposes.
MANITOU BF SA - Limited company with board of directors - Share capital: 39,668,399 euros - 857 802 508 RCS Nantes