Technical sheet :

BALE CLAMP INTENSIVE

Technical characteristics

- Rounded forged 2x4 teeth.
- Synchronized closure.
- Impressive lifting capacity of 1800 kg / 3969 lb.
- Handles 1 or 2 round bales: 1.80 m maximum.
- Handles 2 rectangular bale: 1,2 m / 4 ft high.
- Handles 3 rectangular bales: 0,8 m / 3 ft high each.
- Optional: 2 lower tines 680 mm / 27 in Ø 35 mm / 1 in ref. 790521 - spare parts kit.

  [The 3D picture at the top of this page is the reference P2BG 2x4 - 790518].

Customer benefits

- Easy and clean handling.
- Time-saver and competitive attachment.
- Handles 2 round bales or 3 rectangular bales at the same time.
- Perfect stability while handling square bales with optional lower tines.

Capacities		Lower Tines	P2BG 2x4
Capacity (kg)		-	1800
Weight			
Overall weight (kg)		35	283
Weight and dimensions			
Overall height (mm)	h17	-	1776
Overall length (mm)	l1	680	1047
Width (mm)		-	1090
Arm length (mm)		-	600
Working Parameters			
Required machine equipment		-	
Teeth / Fingers		2	2 / 4
Minimum opening (mm)		-	150
Maximum opening (mm)		-	1770

Machines compatibility	Lower Tines	P2BG 2x4
Reference number	790521	790518
ALT950	X	X
MLA-T 533-145 V+ - ST5	X	X
MLT 630-115 (S1)	X	X
MLT 630-115 (S2)	-	X
MLT 630-115 V (S1)	X	X
MLT 630-115 V (S2)	-	X
MLT 630-115 V CP (S1)	X	X
MLT 630-115 V CP (S2)	-	X
MLT 635-130 PS+ (S1)	-	X
MLT 635-130 PS+ (S2)	-	X
MLT 635-140 V+ (S1)	-	X
MLT 635-140 V+ (S2)	-	X
MLT 730-115 V (S1)	X	X
MLT 730-115 V (S2)	-	X
MLT 730-115 V CP (S1)	X	X
MLT 730-115 V CP (S2)	-	X
MLT 733-115	X	X
MLT 733-115 (S2)	-	X
MLT 733-115 LSU (S1)	X	X
MLT 737-130 PS+ (S1)	X	X
MLT 738-130 PS+ (S1)	-	X
MLT 741-130 PS+ (S1)	X	X
MLT 741-140 V+ (S1)	X	X
MLT 742-130 PS+ (S1)	-	X
MLT 742-140 V+ (S1)	-	X
MLT 841-145 PS+	X	X
MLT 850-145 V+	X	X
MLT 937-115 (S1)	-	X
MLT 940-140 V+ (S2)	-	X
MLT 961-160 V+ L	X	X
MLT 1041-145 PS+L	X	X
MLT-X 732	X	X
MLT-X 735 T LSU	X	X
MLT-X 735 T LSU (70 KW)	X	X
MLT-X 738-130 PS+ (S1)	-	X
MLT-X 741 T LSU	-	X
MLT-X 841 - 145 PS+	X	X
MLT-X 850-145 V+	X	X
MLT-X 961-160 V+ L	X	X
MLT-X 1041-145 PS+L	X	X
MLT 630-105 ST4 OLD	X	X
MLT 630-105 V CP ST4 OLD	X	X
MLT 630-105 V ST4 OLD	X	X
MLT 635-130 PS+ ST4 OLD	X	X
MLT 635-140 V+ ST4 OLD	-	X
MLT 730-115 V CP ST4 OLD	X	X
MLT 730-115 V ST4 OLD	X	X
MLT 733-115 LSU ST4 OLD	X	X
MLT 733-115 ST4 OLD	X	X
MLT 737-130 PS+ ST4 OLD	X	X
MLT 741-140 V+ ST4 OLD	X	X
MLT 840-145 PS+ OLD	X	X
MLT 940-140 V+ ST4 OLD	X	X
MLT 961-145 V+ L OLD	X	X
MLT 1040-145 PS+ L OLD	X	X
MLT-X 737-130 PS+ OLD	-	X
MLT-X 737-130 PS+ (S2) OLD	X	X
MLT-X 741-140 V+ S1 OLD	X	X
MLT-X 840-140 PS+ OLD	X	X
MLT-X 961-145 V+ L OLD	X	X
MLT-X 1035 LT LSU OLD	X	X
MLT-X 1040-140 PS+ L OLD	X	X

TABLE SYMBOL					
	No predisposition required		Hydraulic line		Return piping to hydraulic oil tank
	Electric predisposition		Platform predisposition		Tyre handler, cylinder handler predisposition

Bale Clamp Intensive - Dimensional drawing

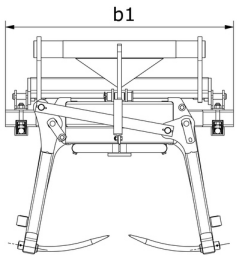

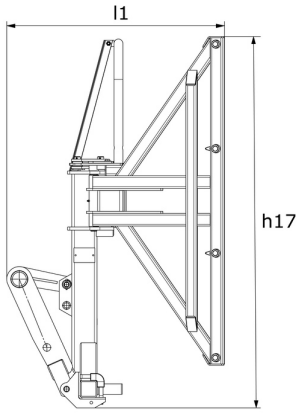

Head Office
B.P. 249 - 430 rue de l'Aubinière
44150 Ancenis Cedex - France
Tel: +33 (0)2 40 09 10 11 - Fax: +33 (0)2 40 09 10 97
www.manitou.com

This publication provides a description of the configuration versions and options for Manitou products, which may differ for equipment. The equipment presented in this brochure may be part of a series, as an option, or it may not be available, depending on the versions. Manitou reserves the right, at any time and without notice, to amend the specifications described and represented. The specifications provided do not bind the manufacturer. For more details, please contact your Manitou agent. This is not a contractually binding document. The presentation of the products is not contractually binding. List of specifications non-exhaustive. The logos as well as the visual identity of the company are owned by Manitou and cannot be used without authorisation. All rights reserved. The photos and diagrams contained in this brochure are only provided for consultation and information purposes.
MANITOU BF SA - Limited company with board of directors - Share capital: 39,668,399 euros - 857 802 508 RCS Nantes