Technical sheet :

AGRICULTURAL MULTIFUNCTION GRAB BUCKET - FO

Technical characteristics

- Forged teeth -FO.
- Handling materials with a density ≤ 1000 kg/m³ / 62 lb/ft³.
- Dismountable sides, spill guard and 500 HB bolt-on cutting edge standard.
- Reinforced structure (base, blade and grab).
- Nitritized cylinders, all pins with "construction type" mounting.

[The 3D picture at the top of this page is the reference BG 2450 / 1700 FO - 52549810].

Customer benefits

- Robust and versatile bucket suitable for diary use and different agricultural applications.
- Complete opening >90° and powerful jaw allows working flush with walls.
- Perfect for handling wet manure, silage…
- Must-have tool for livestock farm.

Technical characteristics		BG 1500 / 850 FO	BG 1850 / 1050 FO	BG 2100 / 1200 FO	BG 2300 / 1350 FO	BG 2450 / 1400 FO	BG 2450 / 1700 FO
Distance to center of gravity (mm)		421	435	396	408	407	-
Capacities							
Capacity (kg)		850	1059	1200	1335	1426	1695
Heaped capacity (l)		850	1059	1200	1335	1426	1695
Struck capacity (l)		521	650	740	813	868	1150
Weight							
Overall weight (kg)		560	636	720	763	803	870
Weight and dimensions							
Overall length (mm)	l1	1238	1263	1256	1256	1256	1367
Width (mm)		1500	1850	2100	2300	2450	2450
Closed grapple height (mm)	h33	1039	1033	1033	1031	1033	1124
Opened grapple height (mm)	h34	1675	1675	1675	1675	1675	1886
Working Parameters							
Required machine equipment							
Teeth		6	7	8	9	10	11
Minimum forks spread (mm)	b5	265	265	263	255	242	219
Maximum forks spread (mm)	b5	266	265	263	255	244	219
Other Data for Attachments							
Bolted wearplate (LDR)		Standard	Standard	Standard	Standard	Standard	Standard
Wear plate hardness		500	500	500	500	500	500

Machines compatibility	BG 1500 / 850 FO	BG 1850 / 1050 FO	BG 2100 / 1200 FO	BG 2300 / 1350 FO	BG 2450 / 1400 FO	BG 2450 / 1700 FO
Reference number	52651958	52647327	52647329	52647331	52647333	52549810
Skid Steer Carriage reference	52651957	-	-	-	-	-
ALT950	-	-	-	X	X	X
MLA-T 533-145 V+ - ST5	-	-	-	X	X	X
MLT 420-60 H	X	-	-	-	-	-
MLT 625-75 H	-	X	-	-	-	-
MLT 625 e	-	X	-	-	-	-
MLT 630-115 (S1)	-	-	X	X	X	X
MLT 630-115 (S2)	-	-	X	X	X	-
MLT 630-115 V (S1)	-	-	X	X	X	X
MLT 630-115 V (S2)	-	-	X	X	X	-
MLT 630-115 V CP (S1)	-	-	X	X	X	X
MLT 630-115 V CP (S2)	-	-	X	X	X	-
MLT 635-130 PS+ (S1)	-	-	-	-	X	X
MLT 635-130 PS+ (S2)	-	-	-	-	X	X
MLT 635-140 V+ (S1)	-	-	-	-	X	X
MLT 635-140 V+ (S2)	-	-	-	-	X	X
MLT 730-115 V (S1)	-	-	X	X	X	X
MLT 730-115 V (S2)	-	-	X	X	X	-
MLT 730-115 V CP (S1)	-	-	X	X	X	X
MLT 730-115 V CP (S2)	-	-	X	X	X	-
MLT 733-115	-	-	-	-	X	X
MLT 733-115 (S2)	-	-	-	-	X	X
MLT 733-115 LSU (S1)	-	-	-	-	X	X
MLT 737-130 PS+ (S1)	-	-	-	-	X	X
MLT 738-130 PS+ (S1)	-	-	-	-	X	X
MLT 741-130 PS+ (S1)	-	-	-	-	X	X
MLT 741-140 V+ (S1)	-	-	-	-	X	X
MLT 742-130 PS+ (S1)	-	-	-	-	X	X
MLT 742-140 V+ (S1)	-	-	-	-	X	X
MLT 841-145 PS+	-	-	-	-	X	X
MLT 850-145 V+	-	-	-	-	-	X
MLT 937-115 (S1)	-	-	-	-	X	X
MLT 940-140 V+ (S1)	-	-	-	-	X	X
MLT 940-140 V+ (S2)	-	-	-	-	X	X
MLT 1041-145 PS+L	-	-	-	-	X	X
MLT-X 625-75 H	-	X	-	-	-	-
MLT-X 732	-	-	-	-	X	-
MLT-X 735 T LSU	-	-	-	-	X	X
MLT-X 738-130 PS+ (S1)	-	-	-	-	X	X
MLT-X 741 T LSU	-	-	-	-	X	X
MLT-X 841 - 145 PS+	-	-	-	-	X	X
MLT-X 850-145 V+	-	-	-	-	-	X
MLT-X 1041-145 PS+L	-	-	-	-	X	X
MLT 630-105 ST4 OLD	-	-	X	X	X	X
MLT 630-105 V CP ST4 OLD	-	-	X	X	X	X
MLT 630-105 V ST4 OLD	-	-	X	X	X	X
MLT 635-130 PS+ ST4 OLD	-	-	-	-	X	X
MLT 635-140 V+ ST4 OLD	-	-	-	-	X	X
MLT 730-115 V CP ST4 OLD	-	-	X	X	X	X
MLT 730-115 V ST4 OLD	-	-	X	X	X	X
MLT 733-115 LSU ST4 OLD	-	-	-	-	X	X
MLT 733-115 ST4 OLD	-	-	-	-	X	X
MLT 737-130 PS+ ST4 OLD	-	-	-	-	X	X
MLT 741-140 V+ ST4 OLD	-	-	-	-	X	X
MLT 840-145 PS+ OLD	-	-	-	-	X	X
MLT 845-100 H OLD	-	-	-	-	X	X

Machines compatibility	BG 1500 / 850 FO	BG 1850 / 1050 FO	BG 2100 / 1200 FO	BG 2300 / 1350 FO	BG 2450 / 1400 FO	BG 2450 / 1700 FO
MLT 845-120 OLD	-	-	-	-	X	X
MLT 940-140 V+ ST4 OLD	-	-	-	-	X	X
MLT 1040-145 PS+ L OLD	-	-	-	-	X	X
MLT-X 737-130 PS+ OLD	-	-	-	-	X	X
MLT-X 737-130 PS+ (S2) OLD	-	-	-	-	X	X
MLT-X 741-140 V+ S1 OLD	-	-	-	-	X	X
MLT-X 840-140 PS+ OLD	-	-	-	-	X	X
MLT-X 1040-140 PS+ L OLD	-	-	-	-	X	X

TABLE SYMBOL					
	No predisposition required		Hydraulic line		Return piping to hydraulic oil tank
	Electric predisposition		Platform predisposition		Tyre handler, cylinder handler predisposition

Agricultural Multifunction Grab Bucket - FO - Dimensional drawing

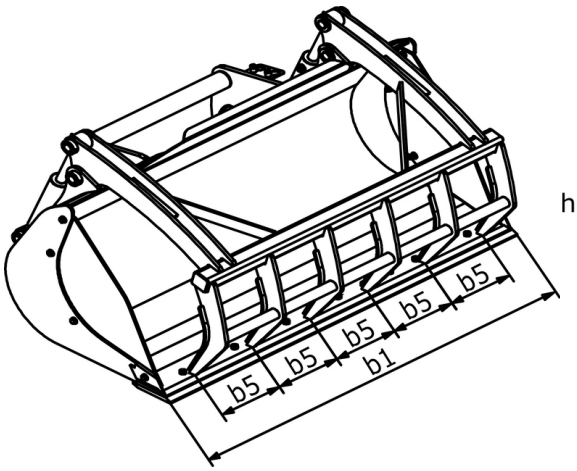

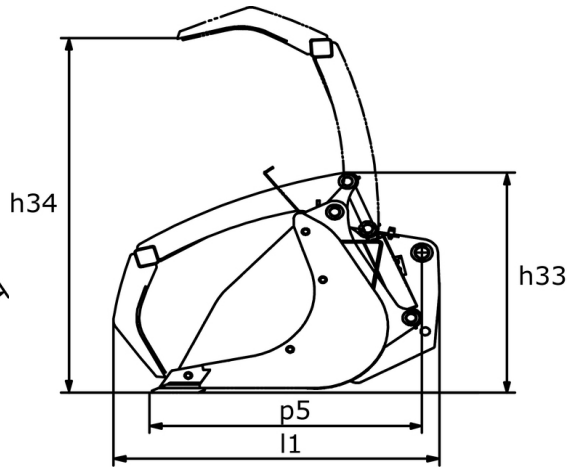

Head Office
B.P. 249 - 430 rue de l'Aubinière
44150 Ancenis Cedex - France
Tel: +33 (0)2 40 09 10 11 - Fax: +33 (0)2 40 09 10 97
www.manitou.com

This publication provides a description of the configuration versions and options for Manitou products, which may differ for equipment. The equipment presented in this brochure may be part of a series, as an option, or it may not be available, depending on the versions. Manitou reserves the right, at any time and without notice, to amend the specifications described and represented. The specifications provided do not bind the manufacturer. For more details, please contact your Manitou agent. This is not a contractually binding document. The presentation of the products is not contractually binding. List of specifications non-exhaustive. The logos as well as the visual identity of the company are owned by Manitou and cannot be used without authorisation. All rights reserved. The photos and diagrams contained in this brochure are only provided for consultation and information purposes.
MANITOU BF SA - Limited company with board of directors - Share capital: 39,668,399 euros - 857 802 508 RCS Nantes