Technical sheet :

# AGRICULTURAL BUCKET

## Technical characteristics

- Wide range of bucket capacities from 900 L / 32 ft³ to 3000 L / 106 ft³.
- Light material bucket suitable for handling materials with a density ≤ 1000 kg/m³ / 62 lb/ft³.
- Reinforced structure (base, blade and sides).
- "DA" = tip angle increased of 10°.
- Optional: 500 HB reversible wear plate.
- Note: road circulation kit mandatory in Italy. Contact your dealer.

  [The 3D picture at the top of this page is the reference CBA 2500/2450 - 570554].

## Customer benefits

- Daily use and hard working bucket.
- Ideal bucket for bulk products (cereals, woodchip, mineral feed etc.).
- Shape designed for quick loading and unloading operation.

| Technical characteristics | | CBA 900 / 1500 | CBA 1500 / 2050 | CBA 1500 / 2050 DA | CBA 1500 / 2450 | CBA 1700L / 2100 | CBA 2000 / 2450 | CBA 2000L / 2250 | CBA 2500L / 2450 | CBA 3000 / 2500 |
|---|---|---|---|---|---|---|---|---|---|---|
| Distance to center of gravity (mm) | | 523 | 572 | 509 | 542 | 440 | 485 | 664 | 537 | 583 |
| **Capacities** | | | | | | | | | | |
| Capacity (kg) | | 886 | 1500 | 1500 | 1529 | 1703 | 2010 | 1970 | 2526 | 3023 |
| Heaped capacity (l) | | 886 | 1500 | 1500 | 1529 | 1703 | 2010 | 1970 | 2526 | 3023 |
| Struck capacity (l) | | 672 | 1101 | 1101 | 1101 | 1271 | 1484 | 1456 | 1916 | 2342 |
| **Weight** | | | | | | | | | | |
| Overall weight (kg) | | 367 | 490 | 482 | 500 | 512 | 557 | 585 | 675 | 753 |
| **Weight and dimensions** | | | | | | | | | | |
| Overall height (mm) | h17 | 1029 | 1119 | 1119 | 997 | 1150 | 1150 | 1104 | 1250 | 1314 |
| Overall length (mm) | l1 | 1154 | 1147 | 1147 | 1170 | 1190 | 1204 | 1422 | 1497 | 1733 |
| Width (mm) | | 1500 | 2050 | 2050 | 2450 | 2100 | 2450 | 2250 | 2450 | 2500 |
| **Working Parameters** | | | | | | | | | | |
| Required machine equipment | | × | × | × | × | × | × | × | × | × |

| Machines compatibility | CBA 900 / 1500 | CBA 1500 / 2050 | CBA 1500 / 2050 DA | CBA 1500 / 2450 | CBA 1700L / 2100 | CBA 2000 / 2450 | CBA 2000L / 2250 | CBA 2500L / 2450 | CBA 3000 / 2500 |
|---|---|---|---|---|---|---|---|---|---|
| Reference number | 570543 | 570546 | 653035 | 570547 | 570549 | 570551 | 790540 | 570553 | 570555 |
| Reference number with bolted wearplate (WP) | - | - | 52000489 | 570548 | 52610570 | 570552 | 790541 | 570554 | 500701 |
| Skid Steer Carriage reference | 52658300 | - | - | - | - | - | - | - | - |
| ALT950 | - | - | - | X | - | X | X | - | - |
| MLA-T 533-145 V+ - ST5 | - | - | - | X | - | X | X | - | - |
| MLT 420-60 H | X | - | - | - | - | - | - | - | - |
| MLT 625-75 H | - | X | X | - | - | - | - | - | - |
| MLT 625 e | - | X | X | - | - | - | - | - | - |
| MLT 630-115 (S1) | - | - | - | X | X | X | X | - | - |
| MLT 630-115 (S2) | - | - | - | - | X | X | X | - | - |
| MLT 630-115 V (S1) | - | - | - | X | X | X | X | - | - |
| MLT 630-115 V (S2) | - | - | - | - | X | X | X | - | - |
| MLT 630-115 V CP (S1) | - | - | - | X | X | X | X | - | - |
| MLT 630-115 V CP (S2) | - | - | - | - | X | X | X | - | - |
| MLT 635-130 PS+ (S1) | - | - | - | X | - | X | - | X | - |
| MLT 635-130 PS+ (S2) | - | - | - | X | - | X | - | X | X |
| MLT 635-140 V+ (S1) | - | - | - | X | - | X | - | X | - |
| MLT 635-140 V+ (S2) | - | - | - | X | - | X | - | X | X |
| MLT 730-115 V (S1) | - | - | - | X | X | X | X | - | - |
| MLT 730-115 V (S2) | - | - | - | - | X | X | X | - | - |
| MLT 730-115 V CP (S1) | - | - | - | X | X | X | X | - | - |
| MLT 730-115 V CP (S2) | - | - | - | - | X | X | X | - | - |
| MLT 733-115 | - | - | - | X | X | X | X | X | - |
| MLT 733-115 (S2) | - | - | - | X | - | X | - | X | - |
| MLT 733-115 LSU (S1) | - | - | - | X | X | X | X | X | - |
| MLT 737-130 PS+ (S1) | - | - | - | X | X | X | X | X | X |
| MLT 738-130 PS+ (S1) | - | - | - | X | - | X | - | X | X |
| MLT 741-130 PS+ (S1) | - | - | - | X | X | X | X | X | X |
| MLT 741-140 V+ (S1) | - | - | - | X | X | X | X | X | X |
| MLT 742-130 PS+ (S1) | - | - | - | X | - | X | - | X | X |
| MLT 742-140 V+ (S1) | - | - | - | X | - | X | - | X | X |
| MLT 841-145 PS+ | - | - | - | - | - | X | - | X | X |
| MLT 850-145 V+ | - | - | - | - | - | - | - | X | X |
| MLT 937-115 (S1) | - | - | - | X | - | X | X | X | - |
| MLT 940-140 V+ (S1) | - | - | - | - | - | X | - | X | X |
| MLT 940-140 V+ (S2) | - | - | - | - | - | X | - | X | X |
| MLT 1041-145 PS+L | - | - | - | - | - | X | - | X | X |
| MLT-X 625-75 H | - | X | X | - | - | - | - | - | - |
| MLT-X 732 | - | - | - | X | - | X | - | X | - |
| MLT-X 735 T LSU | - | - | - | X | - | X | - | X | - |
| MLT-X 735 T LSU (70 KW) | - | - | - | X | - | - | - | X | - |
| MLT-X 738-130 PS+ (S1) | - | - | - | X | - | X | - | X | X |
| MLT-X 741 T LSU | - | - | - | - | - | X | - | X | X |
| MLT-X 841 - 145 PS+ | - | - | - | - | - | X | - | X | X |
| MLT-X 850-145 V+ | - | - | - | - | - | - | - | X | X |
| MLT-X 1041-145 PS+L | - | - | - | - | - | X | - | X | X |
| MLT 630-105 ST4 OLD | - | - | - | X | X | X | X | - | - |
| MLT 630-105 V CP ST4 OLD | - | - | - | X | X | X | X | - | - |
| MLT 630-105 V ST4 OLD | - | - | - | X | X | X | X | - | - |
| MLT 635-130 PS+ ST4 OLD | - | - | - | X | - | X | - | X | - |
| MLT 635-140 V+ ST4 OLD | - | - | - | X | - | X | X | X | - |
| MLT 730-115 V CP ST4 OLD | - | - | - | X | X | X | X | - | - |
| MLT 730-115 V ST4 OLD | - | - | - | X | X | X | X | - | - |
| MLT 733-115 LSU ST4 OLD | - | - | - | X | X | X | X | X | - |
| MLT 733-115 ST4 OLD | - | - | - | X | X | X | X | X | - |
| MLT 737-130 PS+ ST4 OLD | - | - | - | X | X | X | X | X | X |
| MLT 741-140 V+ ST4 OLD | - | - | - | X | X | X | X | X | X |
| MLT 840-145 PS+ OLD | - | - | - | - | - | X | - | X | X |
| MLT 845-100 H OLD | - | - | - | X | - | X | - | X | X |
| MLT 845-120 OLD | - | - | - | X | - | X | - | X | X |
| MLT 940-140 V+ ST4 OLD | - | - | - | - | - | X | - | X | X |
| MLT 1040-145 PS+ L OLD | - | - | - | - | - | X | - | X | X |
| MLT-X 737-130 PS+ OLD | - | - | - | X | X | X | X | X | X |

| Machines compatibility | CBA 900 / 1500 | CBA 1500 / 2050 | CBA 1500 / 2050 DA | CBA 1500 / 2450 | CBA 1700L / 2100 | CBA 2000 / 2450 | CBA 2000L / 2250 | CBA 2500L / 2450 | CBA 3000 / 2500 |
|---|---|---|---|---|---|---|---|---|---|
| MLT-X 737-130 PS+ (S2) OLD | - | - | - | X | X | X | X | X | - |
| MLT-X 741-140 V+ S1 OLD | - | - | - | X | X | X | X | X | X |
| MLT-X 840-140 PS+ OLD | - | - | - | - | - | X | - | X | X |
| MLT-X 845-120 OLD | - | - | - | X | - | X | - | X | X |
| MLT-X 845-120 H OLD | - | - | - | X | - | X | - | X | X |
| MLT-X 1035 LT LSU OLD | - | - | - | X | - | - | - | X | - |
| MLT-X 1040-140 PS+ L OLD | - | - | - | - | - | X | - | X | X |

| TABLE SYMBOL | | | | | |
|---|---|---|---|---|---|
| | No predisposition required | | Hydraulic line | | Return piping to hydraulic oil tank |
| | Electric predisposition | | Platform predisposition | | Tyre handler, cylinder handler predisposition |

## Agricultural Bucket - Dimensional drawing

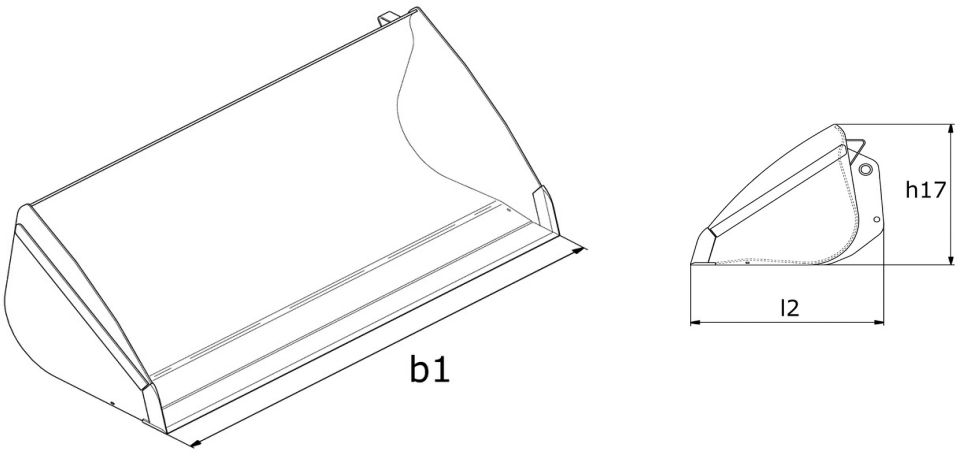

MANITOU
HANDLING YOUR WORLD

**Head Office**
B.P. 249 - 430 rue de l'Aubinière
44150 Ancenis Cedex - France
Tel: +33 (0)2 40 09 10 11 - Fax: +33 (0)2 40 09 10 97
www.manitou.com

This publication provides a description of the configuration versions and options for Manitou products, which may differ for equipment. The equipment presented in this brochure may be part of a series, as an option, or it may not be available, depending on the versions. Manitou reserves the right, at any time and without notice, to amend the specifications described and represented. The specifications provided do not bind the manufacturer. For more details, please contact your Manitou agent. This is not a contractually binding document. The presentation of the products is not contractually binding. List of specifications non-exhaustive. The logos as well as the visual identity of the company are owned by Manitou and cannot be used without authorisation. All rights reserved. The photos and diagrams contained in this brochure are only provided for consultation and information purposes.
MANITOU BF SA - Limited company with board of directors - Share capital: 39,668,399 euros - 857 802 508 RCS Nantes