Technical sheet :

# 850R

MANITOU
HANDLING YOUR WORLD

| Capacities | | Metric |
|---|---|---|
| Rated Operating Capacity | | 386 kg |
| Unladen weight | | 1352 kg |
| **Weight and dimensions** | | |
| Wheelbase | y | 775 mm |
| Overall Operating Height - Fully Raised | h27 | 3167 mm |
| Height to Hinge Pin - Fully Raised | h28 | 2438 mm |
| Overall Height to top of ROPS | h17 | 1897 mm |
| Dump angle at full height | a5 | 46 ° |
| Dump height | h29 | 1836 mm |
| Overall length with bucket | l16 | 2576 mm |
| Dump reach - Full height | r6 | 376 mm |
| Rollback at ground | a13 | 23 ° |
| Seat to ground height | h30 | 879 mm |
| Overall width less bucket | b1 | 909 mm |
| Bucket Width | e1 | 914 mm |
| Ground clearance | m4 | 150 mm |
| Overall length - Less Bucket | l2 | 1905 mm |
| Departure angle | a2 | 30 ° |
| Clearance Radius - Front with Bucket | b18 | 1473 mm |
| **Perfomances** | | |
| Travel speed (unladen) | | 8.90 km/h |
| **Wheels** | | |
| Standard tires | | 5.70 x 12 |
| **Engine** | | |
| Engine brand | | Yanmar |
| Engine model | | 3TNV82A-BPMSR |
| Engine norm | | Stage V |
| Max. torque / Engine rotation | | 86 Nm / 2400 rpm |
| Power source | | Diesel |
| Engine power (Hp / kW) | | 23.90 Hp / 17.80 kW |
| Battery voltage | | 12 V |
| Alternator | | 40 kW |
| Starter | | 1.70 kW |
| **Hydraulics** | | |
| Standard flow - Auxiliary hydraulics | | 38.20 l/min |
| Auxiliary Hydraulic Pressure | | 145 bar |
| **Tank capacities** | | |
| Fuel | | 29 l |
| Hydraulic tank capacity | | 27.30 l |
| Displacement | | 1.30 l |
| **Noise and vibration** | | |
| Noise to environment (LwA) | | 101 dB |
| Noise at driving position (LpA) | | 85 dB |
| Whole-Body Vibration (ISO 2631-1) | | 1.05 m/s² |
| Vibration on hands/arms | | < 1.53 m/s² |

## 850R - Dimensional drawing

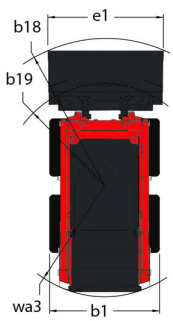

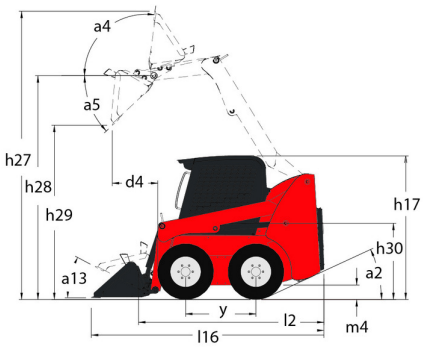

# Equipment

| — | |
|---|---|
| Integral Access Plate (removable) | Standard |
| **Lifting function** | |
| All-Tach® Attachment Mounting System | Standard |
| Auxiliary Hydraulics | Standard |
| **Lighting** | |
| Work Lights - Front and Rear | Standard |
| **Motorization/Power** | |
| Engine Block Heater | Optional |
| **Operator station** | |
| Cab Enclosure | Optional |
| Foot and Hand Throttles 2 | Standard |
| Full-Suspension Seat | Optional |
| Gehl T-Bar Controls | Standard |
| Heating | Optional |
| Horn | Optional |
| ROPS/FOPS Level II Overhead Guard | Standard |
| **Other options** | |
| Hydrostatic Drive - Servo | Standard |
| Selectable Self-Leveling Hydraulic Lift Action 4 | Optional |
| **Security** | |
| Anti-Vandalism Protection | Standard |
| Back-Up Alarm | Optional |
| Brake Control (Auto / Manual) | Standard |
| Hydraloc™ Safety System | Standard |
| Lift Arm Support Device | Standard |
| Operator Restraint Bar | Standard |

**Head Office**
B.P. 249 - 430 rue de l'Aubinière
44150 Ancenis Cedex - France
Tel: +33 (0)2 40 09 10 11 - Fax: +33 (0)2 40 09 10 97
www.manitou.com

This publication provides a description of the configuration versions and options for Manitou products, which may differ for equipment. The equipment presented in this brochure may be part of a series, as an option, or it may not be available, depending on the versions. Manitou reserves the right, at any time and without notice, to amend the specifications described and represented. The specifications provided do not bind the manufacturer. For more details, please contact your Manitou agent. This is not a contractually binding document. The presentation of the products is not contractually binding. List of specifications non-exhaustive. The logos as well as the visual identity of the company are owned by Manitou and cannot be used without authorisation. All rights reserved. The photos and diagrams contained in this brochure are only provided for consultation and information purposes.
MANITOU BF SA - Limited company with board of directors - Share capital: 39,668,399 euros - 857 802 508 RCS Nantes