Technical sheet :

3300V NXT2

MANITOU
HANDLING YOUR WORLD

Capacities		Metric
Rated Operating Capacity		1497 kg
Unladen weight		4087 kg
Weight and dimensions		
Wheelbase	y	1257 mm
Overall Operating Height - Fully Raised	h27	4369 mm
Height to Hinge Pin - Fully Raised	h28	3332 mm
Overall Height to top of ROPS	h17	2083 mm
Dump angle at full height	a5	42 °
Dump height	h29	2502 mm
Overall length with bucket	l16	3874 mm
Dump reach - Full height	r6	813 mm
Rollback at ground	a13	29 °
Seat to ground height	h30	1041 mm
Overall width less bucket	b1	1829 mm
Bucket Width	e1	1880 mm
Ground clearance	m4	229 mm
Overall length - Less Bucket	l2	3023 mm
Departure angle	a2	25 °
Clearance Radius - Front with Bucket	b18	2400 mm
Perfomances		
Travel speed (unladen)		13 km/h
Travel Speed with Two-Speed Option - Maximum		19.60 km/h
Wheels		
Standard tires		14.00 x 17.5 HD
Engine		
Engine brand		Yanmar
Engine model		4TNV98CT-NMS
Engine norm		Stage V
Max. torque / Engine rotation		294 Nm / 2500 rpm
Power source		Diesel
Engine power (Hp / kW)		72 Hp / 52.70 kW
Battery voltage		12 V
Alternator		95 kW
Starter		3 kW
Hydraulics		
Standard flow - Auxiliary hydraulics		89.10 l/min
Auxiliary Hydraulic Pressure		237.90 bar
High-Flow Auxiliary Hydraulics - Option		132 l/min
High-Flow Auxiliary Hydraulics Pressure - Option		220.60 bar
Tank capacities		
Fuel		92.70 l
Hydraulic tank capacity		40 l
Displacement		3.30 l
Noise and vibration		
Noise to environment (LwA)		101 dB
Noise at driving position (LpA)		85 dB
Whole-Body Vibration (ISO 2631-1)		0.79 m/s²
Vibration on hands/arms		< 1.20 m/s²

3300V NXT2 - Dimensional drawing

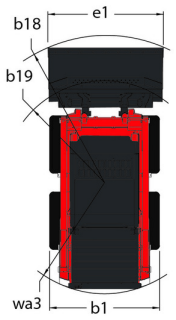

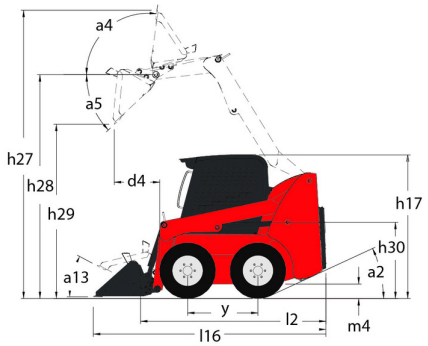

Equipment

—	
Integral Access Plate (removable)	Standard
Lifting function	
All-Tach® Attachment Mounting System	Standard
Auxiliary Hydraulics	Standard
High-Flow Auxiliary Hydraulics	Optional
Power-A-Tach® Attachment Mounting System	Optional
Lighting	
Work Lights - Front and Rear	Standard
Motorization/Power	
Engine Auto-Shutdown System	Standard
Engine Block Heater	Optional
Turbo-Charged Engine	Standard
Two-Speed Drive	Standard
Operator station	
Adjustable Arm Rests / Control Towers 1	Standard
Air conditioning with manual adjustment	Optional
Air suspension seat	Optional
Cab Enclosure	Optional
Dual-Hand Controls	Optional
Foot and Hand Throttles 2	Standard
Gehl T-Bar Controls	Optional
Hand/Foot Controls	Optional
Heating	Optional
High-Back Adjustable Seat	Standard
Horn	Standard
Joystick controls	Optional
ROPS/FOPS Level II Overhead Guard	Standard
Sound Reduction Material	Standard
Suspension Seat - Mechanical	Optional
Other options	
Hydrostatic Drive - Servo	Standard
Selectable Self-Leveling Hydraulic Lift Action 4	Optional
Secondary functions	
Counterweight	Standard
Full Instrumentation	Standard
Hydraglide™ Ride Control 3	Standard
Security	
Anti-Vandalism Protection	Standard
Back-Up Alarm	Optional
Brake Control (Auto / Manual)	Standard
Hydraloc™ Safety System	Standard
Lift Arm Support Device	Standard
Operator Restraint Bar	Standard

Head Office
B.P. 249 - 430 rue de l'Aubinière
44150 Ancenis Cedex - France
Tel: +33 (0)2 40 09 10 11 - Fax: +33 (0)2 40 09 10 97
www.manitou.com

This publication provides a description of the configuration versions and options for Manitou products, which may differ for equipment. The equipment presented in this brochure may be part of a series, as an option, or it may not be available, depending on the versions. Manitou reserves the right, at any time and without notice, to amend the specifications described and represented. The specifications provided do not bind the manufacturer. For more details, please contact your Manitou agent. This is not a contractually binding document. The presentation of the products is not contractually binding. List of specifications non-exhaustive. The logos as well as the visual identity of the company are owned by Manitou and cannot be used without authorisation. All rights reserved. The photos and diagrams contained in this brochure are only provided for consultation and information purposes.
MANITOU BF SA - Limited company with board of directors - Share capital: 39,668,399 euros - 857 802 508 RCS Nantes