Technical sheet :

# 2750VT

MANITOU
HANDLING YOUR WORLD

| Capacities | | Metric |
|---|---|---|
| Rated Operating Capacity | | 1247.37 kg |
| Operating Capacity At 50% Tipping Load | | 1782.16 kg |
| Rated Operating Capacity with Optional Counterweight | | 1301.81 kg |
| Operating Weight | | 4649 kg |
| Unladen weight | | 4145 kg |
| **Weight and dimensions** | | |
| Overall Operating Height - Fully Raised | h27 | 4265 mm |
| Height to Hinge Pin - Fully Raised | h28 | 3289 mm |
| Overall Height to top of ROPS | h17 | 2082 mm |
| Dump angle at full height | a5 | 42 ° |
| Dump height | h29 | 2502 mm |
| Overall length with bucket | l16 | 3810 mm |
| Dump reach - Full height | r6 | 879 mm |
| Rollback Angle at Full Height | a4 | 92 ° |
| Seat to ground height | h30 | 1003 mm |
| Overall width less bucket | b1 | 1803 mm |
| Ground clearance | m4 | 229 mm |
| Overall length - Less Bucket | l2 | 3023 mm |
| Clearance Radius - Front with Bucket | b18 | 2362 mm |
| Rear departure angle | | 30 ° |
| **Performances** | | |
| Travel speed (unladen) | | 8.90 km/h |
| Travel Speed with Two-Speed Option - Maximum | | 13.50 km/h |
| **Wheels** | | |
| Transmission type | | Hydrostatic |
| **Engine** | | |
| Engine brand | | Yanmar |
| Engine model | | 4TNV98CT-XNGL |
| Engine norm | | Stage V |
| Max. torque / Engine rotation | | 294 Nm / 1800 rpm |
| Power source | | Diesel |
| Number of cylinders | | 4 |
| Engine power (Hp / kW) | | 72 Hp / 52.70 kW |
| Engine cooling system | | Water |
| Battery voltage | | 12 V |
| Alternator - Ampere | | 100 A |
| Starter | | 3 kW |
| **Hydraulics** | | |
| Standard flow - Auxiliary hydraulics | | 98.40 l/min |
| Auxiliary Hydraulic Pressure | | 239.59 bar |
| High-Flow Auxiliary Hydraulics - Option | | 126 l/min |
| High-Flow Auxiliary Hydraulics Pressure - Option | | 229.25 bar |
| **Tank capacities** | | |
| Fuel | | 143.80 l |
| Hydraulic tank capacity | | 22.70 l |
| Cooling liquid | | 18 l |

## 2750VT - Dimensional drawing

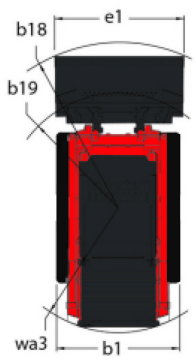

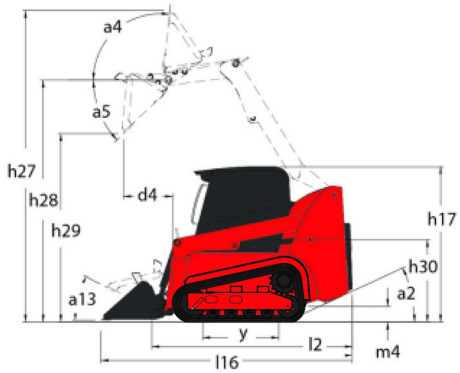

**Head Office**
B.P. 249 - 430 rue de l'Aubinière
44150 Ancenis Cedex - France
Tel: +33 (0)2 40 09 10 11 - Fax: +33 (0)2 40 09 10 97
www.manitou.com

This publication provides a description of the configuration versions and options for Manitou products, which may differ for equipment. The equipment presented in this brochure may be part of a series, as an option, or it may not be available, depending on the versions. Manitou reserves the right, at any time and without notice, to amend the specifications described and represented. The specifications provided do not bind the manufacturer. For more details, please contact your Manitou agent. This is not a contractually binding document. The presentation of the products is not contractually binding. List of specifications non-exhaustive. The logos as well as the visual identity of the company are owned by Manitou and cannot be used without authorisation. All rights reserved. The photos and diagrams contained in this brochure are only provided for consultation and information purposes.
MANITOU BF SA - Limited company with board of directors - Share capital: 39,668,399 euros - 857 802 508 RCS Nantes