Technical sheet :

2750V

MANITOU
HANDLING YOUR WORLD

Capacities		Metric
Operating Capacity At 50% Tipping Load		1247.37 kg
Operating Weight		3719 kg
Unladen weight		3426 kg
Tipping capacity		2495 kg
Weight and dimensions		
Wheelbase	y	1219 mm
Overall Operating Height - Fully Raised	h27	4252 mm
Height to Hinge Pin - Fully Raised	h28	3277 mm
Overall Height to top of ROPS	h17	2058 mm
Dump angle at full height	a5	42 °
Dump height	h29	2489 mm
Overall length with bucket	l16	3810 mm
Dump reach - Full height	r6	830 mm
Rollback Angle at Full Height	a4	92 °
Seat to ground height	h30	978 mm
Overall width less bucket	b1	1712 mm
Ground clearance	m4	216 mm
Overall length - Less Bucket	l2	3023 mm
Clearance Radius - Front with Bucket	b18	2289 mm
Rear departure angle		30 °
Performances		
Travel speed (unladen)		11.40 km/h
Travel Speed with Two-Speed Option - Maximum		17.50 km/h
Wheels		
Transmission type		Hydrostatic
Engine		
Engine brand		Yanmar
Engine model		4TNV98CT-XNGL
Engine norm		Stage V
Max. torque / Engine rotation		294 Nm / 1800 rpm
Power source		Diesel
Number of cylinders		4
Engine power (Hp / kW)		72 Hp / 52.70 kW
Engine cooling system		Water
Battery voltage		12 V
Alternator - Ampere		100 A
Starter		3 kW
Hydraulics		
Standard flow - Auxiliary hydraulics		98.40 l/min
Auxiliary Hydraulic Pressure		239.59 bar
High-Flow Auxiliary Hydraulics - Option		126 l/min
High-Flow Auxiliary Hydraulics Pressure - Option		229.25 bar
Tank capacities		
Fuel		106 l
Hydraulic tank capacity		22.70 l
Displacement		3.30 l
Cooling liquid		18 l

2750V - Dimensional drawing

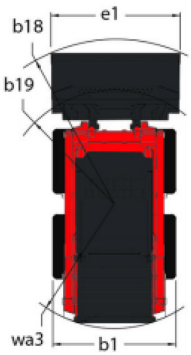

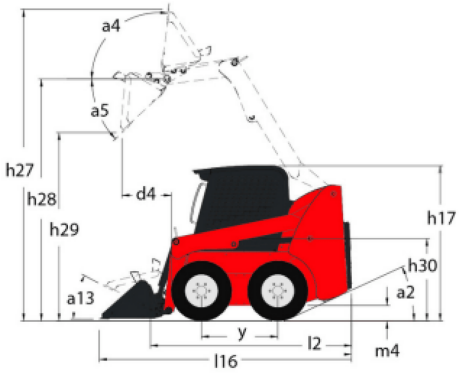

Head Office
B.P. 249 - 430 rue de l'Aubinière
44150 Ancenis Cedex - France
Tel: +33 (0)2 40 09 10 11 - Fax: +33 (0)2 40 09 10 97
www.manitou.com

This publication provides a description of the configuration versions and options for Manitou products, which may differ for equipment. The equipment presented in this brochure may be part of a series, as an option, or it may not be available, depending on the versions. Manitou reserves the right, at any time and without notice, to amend the specifications described and represented. The specifications provided do not bind the manufacturer. For more details, please contact your Manitou agent. This is not a contractually binding document. The presentation of the products is not contractually binding. List of specifications non-exhaustive. The logos as well as the visual identity of the company are owned by Manitou and cannot be used without authorisation. All rights reserved. The photos and diagrams contained in this brochure are only provided for consultation and information purposes.
MANITOU BF SA - Limited company with board of directors - Share capital: 39,668,399 euros - 857 802 508 RCS Nantes