Technical sheet :

260 TJ+ ST5

MANITOU
HANDLING YOUR WORLD

Capacities		Metric
Working height	h21	25.89 m
Platform height	h7	23.89 m
Maximum outreach		19.70 m
Pendular arm rotation (top / bottom)		+70 ° / -63 °
Platform capacity	Q	408 kg
Turret rotation		360 °
Platform rotation (right / left)		90 ° / 90 °
Number of people (indoor / outdoor)		3 / 3
Weight and dimensions		
Platform weight*		16710 kg
Platform dimensions (length x width)	lp / ep	2.30 m x 0.90 m
Floor height (access)	h20	0.48 m
Overall length	l1	10.84 m
Overall width	b1	2.48 m
Overall height	h17	2.71 m
Overall length (stowed)	l9	7.88 m
Overall height (stowed)	h18 ***	2.80 m
Jib length	l13	2.40 m
Counterweight offset (turret at 90°)	a7	1.43 m
External turning radius	Wa3	4.35 m
Ground clearance at centre of wheelbase	m2	0.42 m
Wheelbase	y	2.80 m
Performances		
Drive speed - stowed		4.50 km/h
Drive speed - raised		0.80 km/h
Gradeability		35 %
Permissible leveling		4 °
Wheels		
Tires type		Solid tires
Standard tires		40 x 14 in / 1025 x 365 mm
Drive wheels (front / rear)		2 / 2
Steering wheels (front / rear)		2 / 2
Braking wheels (front / rear)		2 / 2
Engine/Battery		
Engine brand / model		Yanmar - 4TNV88C
Engine norm		Stage V
Engine power (Hp / kW)		46 Hp / 34.30 kW
Miscellaneous		
Ground Pressure		21.30 dan/cm2
Hydraulic Pressure		400 bar
Hydraulic tank capacity		94 l
Fuel		76 l
Sound pressure level (platform work station) (LpA)		79 dB
Daily consumption **		7 l
Standards compliance		
This machine is in compliance with:		European directives: 2006/42/EC- Machinery (revised EN280-1:2022) - 2004/108/EC (EMC) - EMC according to EN 12895 / 2015 +A1 / 2019

*Varies according to options and standards of the country to which the machine is delivered
** According to "REDUCE cycle"

260 TJ+ ST5 - Load chart

Load Chart for MEWP Metric

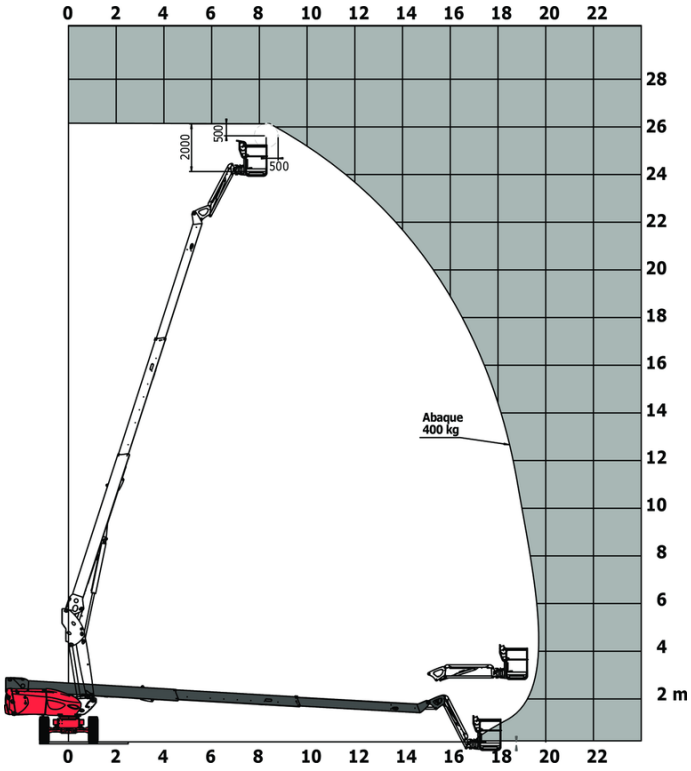

260 TJ+ ST5 - Dimensional drawing

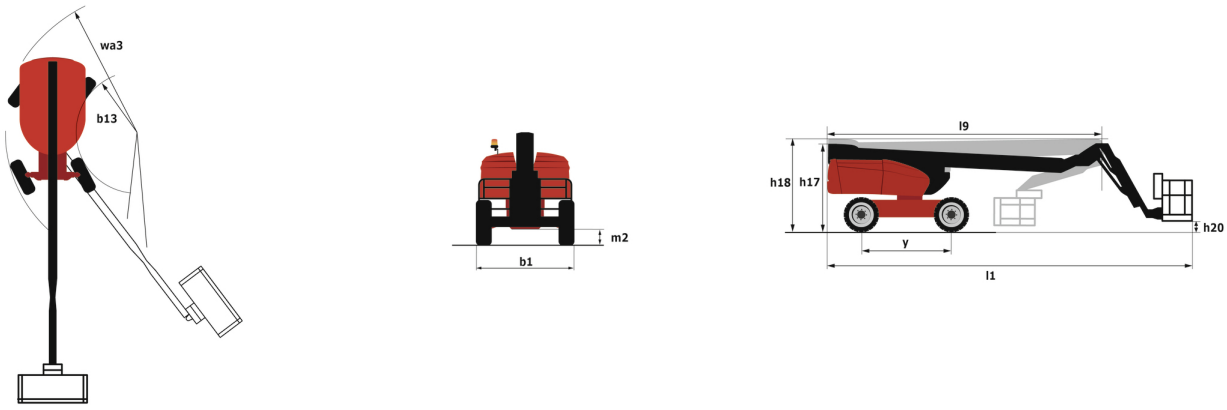

Equipment

Standard
230V Predisposition
4 simultaneous movements
4 wheel drive
4 wheel steer with crab mode
Audible alarm and illuminated indicator lamp (leveling, overload, lowering)
Backup electrical pump
Connected machine
Continuous turret rotation
Differential locking on rear axle
Electronic platform compensation
Emergency stop button in platform and on frame
Engine compartment with key lock
Engine mounted on sliding platform
Engine with DPF (Diesel Particulate Filter)
Front axle with limited slip
Fuel gauge with low level indicator
Hour meter
Integrated diagnostic assistance
LED rotating beacon
LS pump
Large color screen on turret
Leveling unlocking
Operator presence pedal
Oscillating front axle
Painted basket for heavy loads 2,300 mm (7ft 7 in.)
Protective cover for control panel
Remote control for transport
Secondary Protection System (SPS)
Stop & Go system
Turret orientation information
X Y function
Yellow and black safety stickers on moving parts

Optional
110 or 230V plug with differential circuit breaker
Additional storage boxes
Audio warning on all motion
Audio warning on movement
Battery blanket
Battery charger
Battery charger automatic start
Battery cut-off
Biodegradable hydraulic oil - Grade 32
Earthing and shortcircuiting pre-fitting (Bolted ball)
Easy Link - With access control keypad
Easy link with remote lock
Engine Block Heater
External pneumatic supply source
Hydraulic oil for cold temperature
Hydraulic oil heater
Key lock on fuel tank
LED amber strobe light on the basket
Non-marking tlres
On-board generator (3,5 or 5 kW)
Packing for containerization
Painted basket - For heavy loads - Width: 2300 mm (7 ft. 7 in.)
Painted narrow basket for heavy loads 1800mm (5 ft 11 in.)
Panel cradle
Pipe cradle
Rail protection
Reflective stripes
Safety kit - Harness + helmet
Safety valve
Socket 230 V + differential circuit breaker
Starter battery charger and engine pre-heater with common outlet
Water predisposition
Working light

Head Office
B.P. 249 - 430 rue de l'Aubinière
44150 Ancenis Cedex - France
Tel: +33 (0)2 40 09 10 11 - Fax: +33 (0)2 40 09 10 97
www.manitou.com

This publication provides a description of the configuration versions and options for Manitou products, which may differ for equipment. The equipment presented in this brochure may be part of a series, as an option, or it may not be available, depending on the versions. Manitou reserves the right, at any time and without notice, to amend the specifications described and represented. The specifications provided do not bind the manufacturer. For more details, please contact your Manitou agent. This is not a contractually binding document. The presentation of the products is not contractually binding. List of specifications non-exhaustive. The logos as well as the visual identity of the company are owned by Manitou and cannot be used without authorisation. All rights reserved. The photos and diagrams contained in this brochure are only provided for consultation and information purposes.
MANITOU BF SA - Limited company with board of directors - Share capital: 39,668,399 euros - 857 802 508 RCS Nantes