Technical sheet :

200 ATJ ST5

MANITOU
HANDLING YOUR WORLD

Capacities		Metric
Working height	h21	20.37 m
Platform height	h7	18.37 m
Maximum outreach		11.99 m
Overhang		7.97 m
Pendular arm rotation (top / bottom)		+69 ° / -66 °
Platform capacity	Q	230 kg
Turret rotation		355 °
Platform rotation (right / left)		90 ° / 90 °
Number of people (indoor / outdoor)		2 / 2
Weight and dimensions		
Platform weight*		10050 kg
Platform dimensions (length x width)	lp / ep	2.10 m x 0.76 m
Floor height (access)	h20	0.50 m
Overall length	l1	8.42 m
Overall width	b1	2.40 m
Overall height	h17	2.71 m
Overall length (stowed)	l9	6.08 m
Overall height (stowed)	h18 ***	3.12 m
Counterweight offset (turret at 90°)	a7	0.12 m
External turning radius	Wa3	3.90 m
Ground clearance at centre of wheelbase	m2	0.44 m
Wheelbase	y	2.40 m
Performances		
Drive speed - stowed		4.70 km/h
Drive speed - raised		0.80 km/h
Gradeability		40 %
Permissible leveling		5 °
Wheels		
Tires type		Cured-on solid tires
Standard tires		1025 x 365 mm
Drive wheels (front / rear)		2 / 2
Steering wheels (front / rear)		2 / 2
Braking wheels (front / rear)		0 / 2
Engine/Battery		
Engine brand / model		Yanmar - 3TNV88C-KMU
Engine norm		Stage V
Engine power (Hp / kW)		34 Hp / 25.50 kW
Miscellaneous		
Ground Pressure		20.65 dan/cm2
Hydraulic Pressure		340 bar
Hydraulic tank capacity		80 l
Fuel		78.50 l
Standards compliance		
This machine is in compliance with:		European directives: 2006/42/EC- Machinery (revised EN280-1:2022) - 2004/108/EC (EMC) - EMC according to EN 12895 / 2015 +A1 / 2019

*Varies according to options and standards of the country to which the machine is delivered

200 ATJ ST5 - Load chart

Load Chart metric

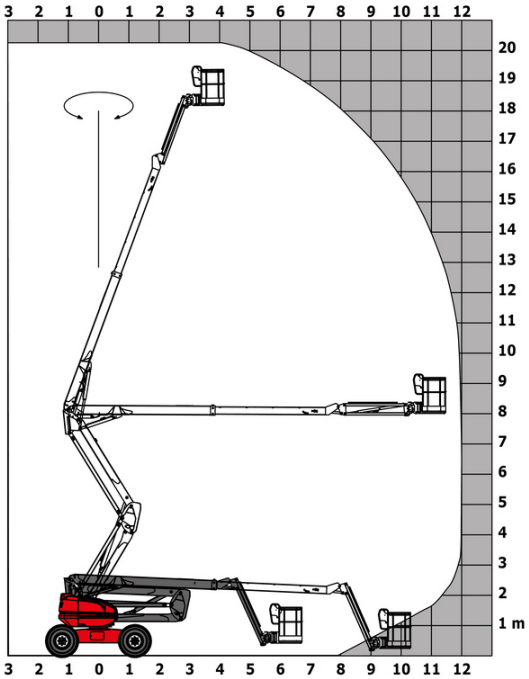

200 ATJ ST5 - Dimensional drawing

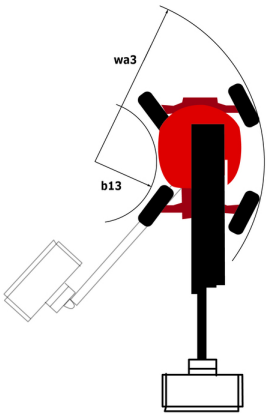

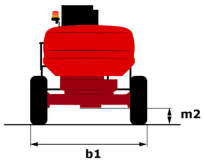

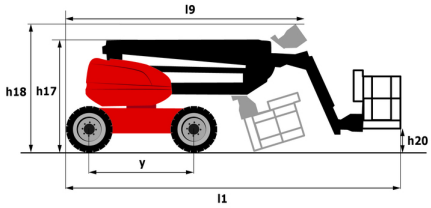

Equipment

Standard
230V Predisposition
4 simultaneous movements
4 wheel drive
4 wheel steer with crab mode
Audible alarm and illuminated indicator lamp (leveling, overload, lowering)
Backup electrical pump
CAN bus technology
Dead man pedal
Differential locking on rear axle
Easy Link with 2 year Service
Emergency stop button in platform and on frame
Engine compartment with key lock
Engine with DPF (Diesel Particulate Filter)
Front axle with limited slip
Fuel gauge with low level indicator
Galvanized basket 2,100 mm
Hour meter
Integrated diagnostic assistance
LED rotating beacon
Large color screen on turret
Management via engine speed bearing
Oscillating front axle
Proportional controls
Secondary Protection System (SPS)
Stop & Go system

Optional
110 or 230V plug with differential circuit breaker
Battery charger
Battery cut-off
Biodegradable hydraulic oil - Grade 32
Coded anti-start
Cold weather protection oil
Engine compartment with key lock
Fuel tank locking cap
Galvanized basket 2,100 mm
High capacity starting battery
Oil tank locking cap
On-board generator (3,5 or 5 kW)
Safety kit - Harness + helmet
Screen protection on the lower box control
Socket 230 V + differential circuit breaker
Water heater

Head Office
B.P. 249 - 430 rue de l'Aubinière
44150 Ancenis Cedex - France
Tel: +33 (0)2 40 09 10 11 - Fax: +33 (0)2 40 09 10 97
www.manitou.com

This publication provides a description of the configuration versions and options for Manitou products, which may differ for equipment. The equipment presented in this brochure may be part of a series, as an option, or it may not be available, depending on the versions. Manitou reserves the right, at any time and without notice, to amend the specifications described and represented. The specifications provided do not bind the manufacturer. For more details, please contact your Manitou agent. This is not a contractually binding document. The presentation of the products is not contractually binding. List of specifications non-exhaustive. The logos as well as the visual identity of the company are owned by Manitou and cannot be used without authorisation. All rights reserved. The photos and diagrams contained in this brochure are only provided for consultation and information purposes.
MANITOU BF SA - Limited company with board of directors - Share capital: 39,668,399 euros - 857 802 508 RCS Nantes