Technical sheet :

1800R (ST5)

MANITOU
HANDLING YOUR WORLD

Capacities		Metric
Rated Operating Capacity		817 kg
Unladen weight		2892 kg
Tipping capacity		1633 kg
Weight and dimensions		
Wheelbase	y	988 mm
Overall Operating Height - Fully Raised	h27	3876 mm
Height to Hinge Pin - Fully Raised	h28	3023 mm
Overall Height to top of ROPS	h17	1948 mm
Dump angle at full height	a5	38 °
Dump height	h29	2379 mm
Overall length with bucket	l16	3139 mm
Dump reach - Full height	r6	579 mm
Rollback at ground	a13	28 °
Rollback Angle at Full Height	a4	99 °
Seat to ground height	h30	930 mm
Overall width less bucket	b1	1582 mm
Bucket Width	e1	1562 mm
Ground clearance	m4	160 mm
Overall length - Less Bucket	l2	2425 mm
Departure angle	a2	19 °
Clearance Radius - Front with Bucket	b18	1869 mm
Rear departure angle		19 °
Performances		
Travel speed (unladen)		12.60 km/h
Wheels		
Transmission type		Hydrostatic
Standard tires		10 x 16.5 - 10 PR HD
Engine		
Engine brand		Yanmar
Engine model		4TNV98C-NMS2V
Engine norm		Stage V
Max. torque / Engine rotation		241 Nm / 2500 rpm
Power source		Diesel
Number of cylinders		4
Engine power (Hp / kW)		69.33 Hp / 51.70 kW
Battery voltage		12 V
Alternator - Ampere		100 A
Starter		3 kW
Hydraulics		
Standard flow - Auxiliary hydraulics		71.40 l/min
Auxiliary Hydraulic Pressure		207 bar
Tank capacities		
Fuel		62.50 l
Hydraulic tank capacity		41.60 l
Displacement		3319 mm³
LH Chain case		8.50 l
RH Chain case		8.50 l

1800R (ST5) - Dimensional drawing

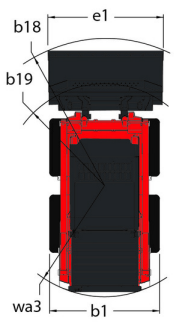

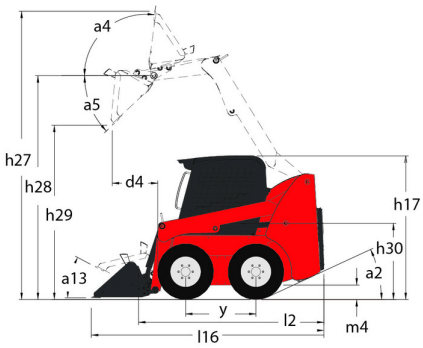

Head Office
B.P. 249 - 430 rue de l'Aubinière
44150 Ancenis Cedex - France
Tel: +33 (0)2 40 09 10 11 - Fax: +33 (0)2 40 09 10 97
www.manitou.com

This publication provides a description of the configuration versions and options for Manitou products, which may differ for equipment. The equipment presented in this brochure may be part of a series, as an option, or it may not be available, depending on the versions. Manitou reserves the right, at any time and without notice, to amend the specifications described and represented. The specifications provided do not bind the manufacturer. For more details, please contact your Manitou agent. This is not a contractually binding document. The presentation of the products is not contractually binding. List of specifications non-exhaustive. The logos as well as the visual identity of the company are owned by Manitou and cannot be used without authorisation. All rights reserved. The photos and diagrams contained in this brochure are only provided for consultation and information purposes.
MANITOU BF SA - Limited company with board of directors - Share capital: 39,668,399 euros - 857 802 508 RCS Nantes