Technical sheet :

# 170 AETJ-L

| Capacities | | Metric |
|---|---|---|
| Working height | h21 | 16.51 m |
| Platform height | h7 | 14.51 m |
| Maximum outreach | | 9 m |
| Overhang | | 7 m |
| Pendular arm rotation (top / bottom) | | +70 ° / -70 ° |
| Platform capacity | Q | 220 kg |
| Turret rotation | | 355 ° |
| Platform rotation (right / left) | | 66 ° / 59 ° |
| Number of people (indoor / outdoor) | | 2 / 2 |
| **Weight and dimensions** | | |
| Platform weight* | | 7225 kg |
| Platform dimensions (length x width) | lp / ep | 1.20 m x 0.92 m |
| Floor height (access) | h20 | 0.40 m |
| Overall length | l1 | 6.84 m |
| Overall width | b1 | 1.75 m |
| Overall height | h17 | 1.97 m |
| Overall length (stowed) | l9 | 5.12 m |
| Overall height (stowed) | h18 *** | 2.04 m |
| Jib length | l13 | 1.26 m |
| Counterweight offset (turret at 90°) | a7 | 0.08 m |
| External turning radius | Wa3 | 4.30 m |
| Ground clearance at centre of wheelbase | m2 | 0.14 m |
| Wheelbase | y | 2 m |
| **Performances** | | |
| Drive speed - stowed | | 5 km/h |
| Drive speed - raised | | 0.60 km/h |
| Gradeability | | 22 % |
| Permissible leveling | | 3 ° |
| **Wheels** | | |
| Tires type | | Solid non-marking tires |
| Standard tires | | 24 x 7.5 in / 600 x 190 mm |
| Drive wheels (front / rear) | | 0 / 2 |
| Steering wheels (front / rear) | | 2 / 0 |
| Braking wheels (front / rear) | | 0 / 2 |
| **Engine/Battery** | | |
| Drive motor power rating | | 2 x 3 kW |
| Lift motor power | | 3.70 kW |
| Battery voltage | | 48 V |
| Battery nominal voltage / capacity | | 48 V / 240 Ah |
| Battery energy | | 11 kW/h |
| On-board charger (V / A) | | 48 V / 30 A |
| **Miscellaneous** | | |
| Number of cycles with STD Battery (HIRD) | | 46 |
| Ground Pressure | | 16.60 dan/cm2 |
| Hydraulic Pressure | | 200 bar |
| Hydraulic tank capacity | | 15 l |
| Vibration on hands/arms | | < 0.66 m/s² |
| **Standards compliance** | | |
| This machine is in compliance with: | | European directives: 2006/42/EC- Machinery (revised EN280-1:2022) - 2004/108/EC (EMC) - EMC according to EN 12895 / 2015 +A1 / 2019 |

*Varies according to options and standards of the country to which the machine is delivered

# 170 AETJ-L - Load chart

## Load Chart metric

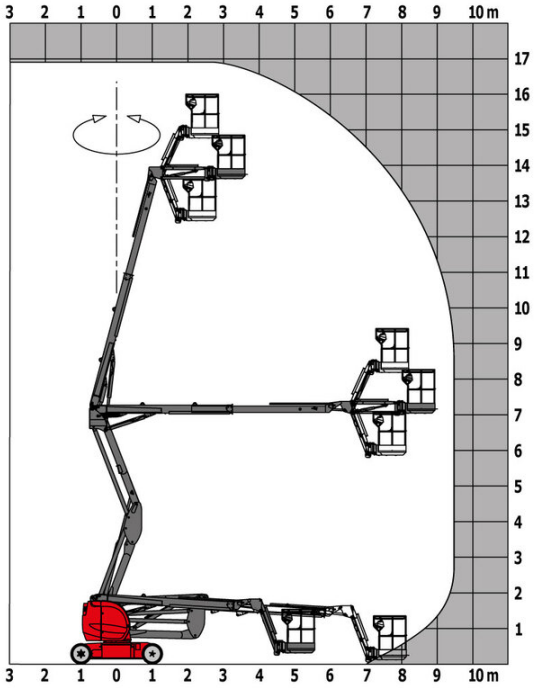


# 170 AETJ-L - Dimensional drawing

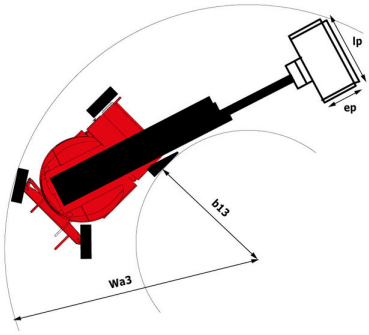


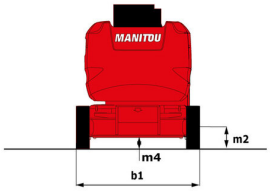


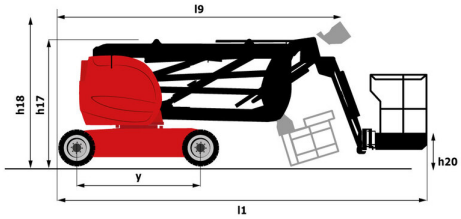

# Equipment

| Standard |
| --- |
| 230V Predisposition |
| Audible alarm and illuminated indicator lamp (leveling, overload, lowering) |
| CAN bus technology |
| Easy Link with 2 year Service |
| Emergency stop button in platform and on frame |
| Horn in the platform |
| Manual emergency lowering |
| Multi-function smartview display |
| Multi-voltage integrated charger |
| Negative-type braking on rear wheels |
| Non-marking rubber tyres |
| Pendular arm |
| Platform with open-work floor |
| Proportional controls |
| Secondary Protection System (SPS) |
| Slinging and securing rings |
| Tool box in platform |
| Traction battery |
| Travel possible at maximum height |

| Optional |
| --- |
| 110 or 230V plug with differential circuit breaker |
| Audio warning on all motion |
| Audio warning on movement |
| Biodegradable hydraulic oil - Grade 32 |
| Centralized filling of the battery |
| Cold weather protection oil |
| Easy Link - With access control keypad |
| Easy link with remote lock |
| External pneumatic supply source |
| High capacity starting battery |
| Maintenance-free battery |
| Non-marking Foam Inflated Tires 683 x 236 mm / 27 x 10-12 in |
| Personalized paintwork |
| Protective cover for control panel |
| Rail protection |
| Safety kit - Harness + helmet |
| Turret orientation information |
| Water predisposition |
| Working light (x1) on basket |

**Head Office**
B.P. 249 - 430 rue de l'Aubinière
44150 Ancenis Cedex - France
Tel: +33 (0)2 40 09 10 11 - Fax: +33 (0)2 40 09 10 97
www.manitou.com

This publication provides a description of the configuration versions and options for Manitou products, which may differ for equipment. The equipment presented in this brochure may be part of a series, as an option, or it may not be available, depending on the versions. Manitou reserves the right, at any time and without notice, to amend the specifications described and represented. The specifications provided do not bind the manufacturer. For more details, please contact your Manitou agent. This is not a contractually binding document. The presentation of the products is not contractually binding. List of specifications non-exhaustive. The logos as well as the visual identity of the company are owned by Manitou and cannot be used without authorisation. All rights reserved. The photos and diagrams contained in this brochure are only provided for consultation and information purposes.
MANITOU BF SA - Limited company with board of directors - Share capital: 39,668,399 euros - 857 802 508 RCS Nantes