Technical sheet :

165ORT

MANITOU
HANDLING YOUR WORLD

Capacities		Metric
Operating Weight		3638 kg
Unladen weight		3638 kg
Operating Capacity at 35% Tipping Load		748 kg
Operating Capacity At 50% Tipping Load		1069 kg
Tipping capacity		2139 kg
Weight and dimensions		
Overall Operating Height - Fully Raised	h27	4008 mm
Height to Hinge Pin - Fully Raised	h28	3038 mm
Dump reach - Full height	r6	641 mm
Dump angle at full height	a5	39 °
Dump Height - Fully Raised	h29	2329 mm
Maximum Rollback Angle - Fully Raised	a4	98 °
Overall Height to top of ROPS	h17	1969 mm
Overall length with bucket	l16	3205 mm
Overall Length without Bucket	l1	2393 mm
Specified Height	h31	1638 mm
Reach at Specified Height	r4	559 mm
Dump angle at specified height	a17	73 °
Carry Position	d5	198 mm
Maximum Rollback Angle at Carry Position	a14	28 °
Digging Position	h32	53 mm
Angle of Departure with STD Counterweight		28 °
Ground clearance	m4	185 mm
Track gauge	b10	1356 mm
Track Shoe Width	b20	320 mm
Crawler base	y2	1265 mm
Overall width less bucket	b1	1753 mm
Bucket Width	e1	1676 mm
Clearance Radius - Front with Bucket	b18	1979 mm
Angle of Approach	a3	90 °
Grouser Height		25 mm
Track Type / Track Rollers / Roller Type		Rubber / 3 / Steel
Performances		
Ground Speed - Single Speed		10.50 km/h
Ground Speed - Two Speed		16.10 km/h
Drawbar Pull/Tractive Effort		4345 kg
Bucket Breakout - Tilt Cylinder		1919 kg
Bucket Breakout - Lift Cylinder		2295 kg
Engine		
Engine brand		Yanmar
Engine model		4TNV98C-NMS2
Motor Type		Radial Piston
Engine power (Hp)		69.30 Hp
Engine power (kW)		51 kW
Max. torque		241 Nm
Battery voltage		12 V
Cold Cranking Amps at Temperature (CCA)		950 A
Alternator - Voltage / Ampere		12 V / 100 A
Hydraulics		
Standard flow - Auxiliary hydraulics		71 l/min
Tank capacities		
Oil Pan Capacity		9 l
Hydraulic tank capacity		39 l
Fuel		62.50 l
Cooling liquid		12.90 l
Displacement / Number of cylinders		3.30 l / 4
Miscellaneous		
Ground Pressure		0.45 bar

1650RT - Dimensional drawing

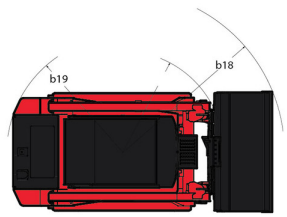

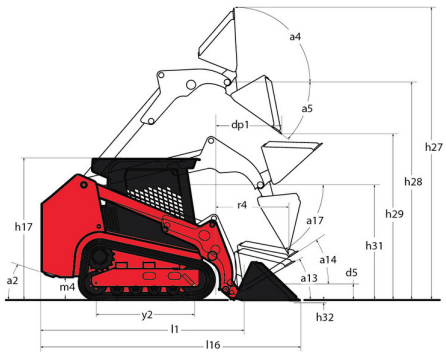

Equipment

Lifting function	
All-Tach® Attachment Mounting System	Standard
Auxiliary Hydraulics	Standard
Electronic Attachment Control - 14-Pin Connector	Optional
High-Flow Auxiliary Hydraulics	Optional
IdealTrax® automatic track tensioning system	Standard
Power-A-Tach® Attachment Mounting System	Optional
Motorization/Power	
Combination Radiator & Hydraulic Oil Cooler	Standard
Dual-Element Air Cleaner with Indicator	Standard
Engine Auto-Shutdown System	Standard
Glowplugs Starts Assist	Standard
Servo-Controlled Hydrostatic Drive	Standard
Two-Speed Hydrostatic Drive System	Standard
Operator station	
Air suspension seat	Optional
Foot Throttle	Standard
Full-Suspension Seat	Standard
Multi-Function Display Screen	Standard
Pressurized Cab Enclosure with A/C	Optional
Rearview Camera	Optional
ROPS/FOPS Level II Overhead Guard	Standard
Sliding Side Windows	Standard
Swing-out Cab Door	Standard
Other options	
Selectable Self-Leveling Hydraulic Lift Action 4	Optional
Pneumatics	
Rubber Track Undercarriage System	Standard
Single Flange Front/Dual Flange Rear Idlers	Standard
Secondary functions	
Counterweight	Standard
Dedicated Undercarriage	Standard
Security	
Anti-Vandalism Lock Provisions	Standard
Back-Up Alarm	Optional
Easy Manager	Standard
Engine Alert System with Error Display	Standard
Mechanical Lift Cylinder Lock	Standard

Head Office
B.P. 249 - 430 rue de l'Aubinière
44150 Ancenis Cedex - France
Tel: +33 (0)2 40 09 10 11 - Fax: +33 (0)2 40 09 10 97
www.manitou.com

This publication provides a description of the configuration versions and options for Manitou products, which may differ for equipment. The equipment presented in this brochure may be part of a series, as an option, or it may not be available, depending on the versions. Manitou reserves the right, at any time and without notice, to amend the specifications described and represented. The specifications provided do not bind the manufacturer. For more details, please contact your Manitou agent. This is not a contractually binding document. The presentation of the products is not contractually binding. List of specifications non-exhaustive. The logos as well as the visual identity of the company are owned by Manitou and cannot be used without authorisation. All rights reserved. The photos and diagrams contained in this brochure are only provided for consultation and information purposes.
MANITOU BF SA - Limited company with board of directors - Share capital: 39,668,399 euros - 857 802 508 RCS Nantes