Technical sheet :

1650R

MANITOU
HANDLING YOUR WORLD

Capacities		Metric
Rated Operating Capacity		748 kg
Rated Operating Capacity with Optional Counterweight		816.50 kg
Unladen weight		2796 kg
Weight and dimensions		
Wheelbase	y	988 mm
Overall Operating Height - Fully Raised	h27	3876 mm
Height to Hinge Pin - Fully Raised	h28	3023 mm
Overall Height to top of ROPS	h17	1948 mm
Dump angle at full height	a5	38 °
Dump height	h29	2380 mm
Overall length with bucket	l16	3101 mm
Dump reach - Full height	r6	579 mm
Rollback at ground	a13	28 °
Seat to ground height	h30	904 mm
Overall width less bucket	b1	1580 mm
Bucket Width	e1	1562 mm
Ground clearance	m4	160 mm
Overall length - Less Bucket	l2	2385 mm
Departure angle	a2	21 °
Clearance Radius - Front with Bucket	b18	1869 mm
Performances		
Travel speed (unladen)		12.60 km/h
Travel Speed with Two-Speed Option - Maximum		19.50 km/h
Wheels		
Standard tires		10.00 x 16.5 HD
Engine		
Engine brand		Yanmar
Engine model		4TNV88C-KMS
Max. torque / Engine rotation		241 Nm / 2500 rpm
Power source		Diesel
Engine power (Hp / kW)		69.73 Hp / 51 kW
Battery voltage		12 V
Alternator		100 kW
Starter		3 kW
Hydraulics		
Standard flow - Auxiliary hydraulics		71.40 l/min
Auxiliary Hydraulic Pressure		207 bar
High-Flow Auxiliary Hydraulics - Option		114 l/min
High-Flow Auxiliary Hydraulics Pressure - Option		179 bar
Tank capacities		
Fuel		62.50 l
Hydraulic tank capacity		41.60 l
Displacement		3.30 l
Noise and vibration		
Noise to environment (LwA)		101 dB
Noise at driving position (LpA)		85 dB
Whole-Body Vibration (ISO 2631-1)		0.90 m/s²
Vibration on hands/arms		< 1.77 m/s²

1650R - Dimensional drawing

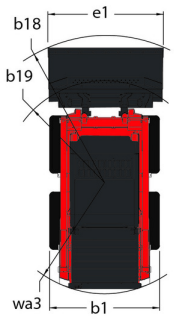

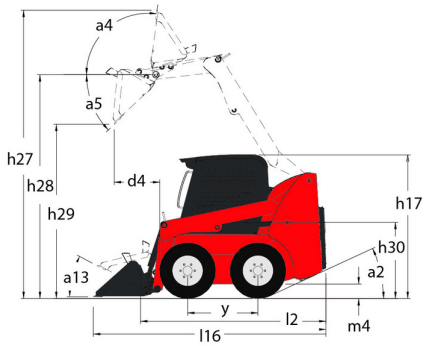

Equipment

—	
Integral Access Plate (removable)	Standard
Lifting function	
All-Tach® Attachment Mounting System	Standard
Auxiliary Hydraulics	Standard
High-Flow Auxiliary Hydraulics	Optional
Power-A-Tach® Attachment Mounting System	Optional
Lighting	
Work Lights - Front and Rear	Standard
Motorization/Power	
Engine Auto-Shutdown System	Standard
Engine Block Heater	Optional
Swing-Out Cooler	Standard
Two-Speed Drive	Optional
Operator station	
Air conditioning with manual adjustment	Optional
Air suspension seat	Optional
Cab Enclosure	Optional
Foot and Hand Throttles 2	Standard
Gehl T-Bar Controls	Optional
Hand/Foot Controls	Optional
Heating	Optional
High-Back Adjustable Seat	Standard
Horn	Standard
Joystick controls	Optional
ROPS/FOPS Level II Overhead Guard	Standard
Sound Reduction Material	Standard
Suspension Seat - Mechanical	Optional
Other options	
Hydrostatic Drive - Servo	Standard
Selectable Self-Leveling Hydraulic Lift Action 4	Optional
Secondary functions	
Counterweight	Optional
Full Instrumentation	Standard
Hydraglide™ Ride Control 3	Optional
Security	
Anti-Vandalism Protection	Standard
Back-Up Alarm	Optional
Brake Control (Auto / Manual)	Standard
Hydraloc™ Safety System	Standard
Lift Arm Support Device	Standard
Operator Restraint Bar	Standard

Head Office
B.P. 249 - 430 rue de l'Aubinière
44150 Ancenis Cedex - France
Tel: +33 (0)2 40 09 10 11 - Fax: +33 (0)2 40 09 10 97
www.manitou.com

This publication provides a description of the configuration versions and options for Manitou products, which may differ for equipment. The equipment presented in this brochure may be part of a series, as an option, or it may not be available, depending on the versions. Manitou reserves the right, at any time and without notice, to amend the specifications described and represented. The specifications provided do not bind the manufacturer. For more details, please contact your Manitou agent. This is not a contractually binding document. The presentation of the products is not contractually binding. List of specifications non-exhaustive. The logos as well as the visual identity of the company are owned by Manitou and cannot be used without authorisation. All rights reserved. The photos and diagrams contained in this brochure are only provided for consultation and information purposes.
MANITOU BF SA - Limited company with board of directors - Share capital: 39,668,399 euros - 857 802 508 RCS Nantes