Technical sheet :

135ORT

MANITOU
HANDLING YOUR WORLD

Capacities		Metric
Operating Weight		2953 kg
Unladen weight		2953 kg
Operating Capacity at 35% Tipping Load		612 kg
Operating Capacity At 50% Tipping Load		875 kg
Tipping capacity		1750 kg
Weight and dimensions		
Overall Operating Height - Fully Raised	h27	3670 mm
Height to Hinge Pin - Fully Raised	h28	2794 mm
Dump reach - Full height	r6	592 mm
Dump angle at full height	a5	40 °
Dump Height - Fully Raised	h29	2123 mm
Maximum Rollback Angle - Fully Raised	a4	98 °
Overall Height to top of ROPS	h17	1930 mm
Overall length with bucket	l16	3076 mm
Overall Length without Bucket	l1	2360 mm
Specified Height	h31	1494 mm
Reach at Specified Height	r4	771 mm
Dump angle at specified height	a17	75 °
Carry Position	d5	165 mm
Maximum Rollback Angle at Carry Position	a14	28 °
Digging Position	h32	18 mm
Angle of Departure with STD Counterweight		28 °
Ground clearance	m4	213 mm
Track gauge	b10	1148 mm
Track Shoe Width	b20	300 mm
Crawler base	y2	1168 mm
Overall width less bucket	b1	1448 mm
Bucket Width	e1	1524 mm
Clearance Radius - Front with Bucket	b18	1918 mm
Track Type / Track Rollers / Roller Type		Rubber / 4 / Steel
Performances		
Ground Speed - Single Speed		10 km/h
Drawbar Pull/Tractive Effort		3248 kg
Bucket Breakout - Tilt Cylinder		1588 kg
Bucket Breakout - Lift Cylinder		1692 kg
Engine		
Engine brand		Yanmar
Engine model		4TNV88C-KMSV
Motor Type		Radial Piston
Engine power (Hp)		46 Hp
Engine power (kW)		34.30 kW
Battery voltage		12 V
Cold Cranking Amps at Temperature (CCA)		800 A
Alternator - Voltage / Ampere		12 V / 100 A
Hydraulics		
Standard flow - Auxiliary hydraulics		63.60 l/min
Tank capacities		
Oil Pan Capacity		6.40 l
Hydraulic tank capacity		34.80 l
Fuel		59.40 l
Displacement / Number of cylinders		7.90 l / 4

1350RT - Dimensional drawing

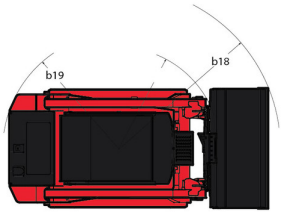

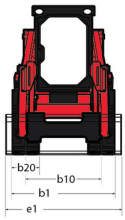

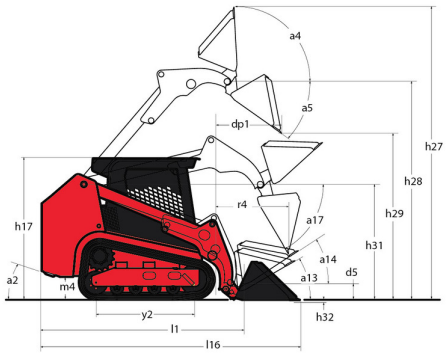

Equipment

Lifting function	
All-Tach® Attachment Mounting System	Standard
Auxiliary Hydraulics	Standard
IdealTrax® automatic track tensioning system	Standard
Lighting	
Beacon	Optional
Motorization/Power	
Combination Radiator & Hydraulic Oil Cooler	Standard
Dual-Element Air Cleaner with Indicator	Standard
Engine Auto-Shutdown System	Optional
Engine Block Heater	Optional
Glowplugs Starts Assist	Standard
Operator station	
Bluetooth car radio	Optional
Foot Throttle	Standard
Full-Suspension Seat	Optional
Joystick controls	Standard
Multi-Function Display Screen	Standard
ROPS/FOPS Level II Overhead Guard	Standard
Sliding Side Windows	Optional
Swing-out Cab Door	Optional
Other options	
Selectable Self-Leveling Hydraulic Lift Action 4	Optional
Pneumatics	
Rubber Track Undercarriage System	Standard
Secondary functions	
Counterweight	Optional
Dedicated Undercarriage	Standard
Security	
4 point lift	Optional
Anti-Vandalism Protection	Standard
Back-Up Alarm	Standard
Engine Alert System with Error Display	Standard
Mechanical Lift Cylinder Lock	Standard

Head Office
B.P. 249 - 430 rue de l'Aubinière
44150 Ancenis Cedex - France
Tel: +33 (0)2 40 09 10 11 - Fax: +33 (0)2 40 09 10 97
www.manitou.com

This publication provides a description of the configuration versions and options for Manitou products, which may differ for equipment. The equipment presented in this brochure may be part of a series, as an option, or it may not be available, depending on the versions. Manitou reserves the right, at any time and without notice, to amend the specifications described and represented. The specifications provided do not bind the manufacturer. For more details, please contact your Manitou agent. This is not a contractually binding document. The presentation of the products is not contractually binding. List of specifications non-exhaustive. The logos as well as the visual identity of the company are owned by Manitou and cannot be used without authorisation. All rights reserved. The photos and diagrams contained in this brochure are only provided for consultation and information purposes.
MANITOU BF SA - Limited company with board of directors - Share capital: 39,668,399 euros - 857 802 508 RCS Nantes