Technical sheet :

1050R

MANITOU
HANDLING YOUR WORLD

Capacities		Metric
Rated Operating Capacity		476 kg
Rated Operating Capacity with Optional Counterweight		533 kg
Unladen weight		1905 kg
Weight and dimensions		
Wheelbase	y	876 mm
Overall Operating Height - Fully Raised	h27	3546 mm
Height to Hinge Pin - Fully Raised	h28	2746 mm
Overall Height to top of ROPS	h17	1786 mm
Dump angle at full height	a5	42 °
Dump height	h29	2146 mm
Overall length with bucket	l16	2896 mm
Dump reach - Full height	r6	579 mm
Rollback at ground	a13	29 °
Seat to ground height	h30	828 mm
Overall width less bucket	b1	1229 mm
Bucket Width	e1	1404 mm
Ground clearance	m4	152 mm
Overall length - Less Bucket	l2	2258 mm
Departure angle	a2	26 °
Clearance Radius - Front with Bucket	b18	1763 mm
Performances		
Travel speed (unladen)		9.50 km/h
Wheels		
Standard tires		27 x 8.5 x 15 HD
Engine		
Engine brand		Yanmar
Engine model		3TNV88C-KMSV
Engine norm		Stage V, Tier 4
Max. torque / Engine rotation		108 Nm / 2800 rpm
Power source		Diesel
Engine power (Hp / kW)		34.20 Hp / 24.70 kW
Battery voltage		12 V
Alternator		40 kW
Starter		2.30 kW
Hydraulics		
Standard flow - Auxiliary hydraulics		55.10 l/min
Auxiliary Hydraulic Pressure		189.60 bar
Tank capacities		
Fuel		39.40 l
Hydraulic tank capacity		30.30 l
Displacement		1.60 l
Noise and vibration		
Noise to environment (LwA)		101 dB
Noise at driving position (LpA)		80 dB
Whole-Body Vibration (ISO 2631-1)		0.81 m/s²
Vibration on hands/arms		< 0.93 m/s²

1050R - Dimensional drawing

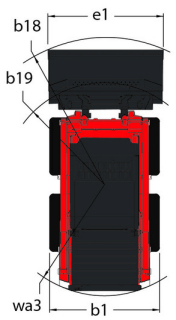

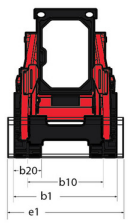

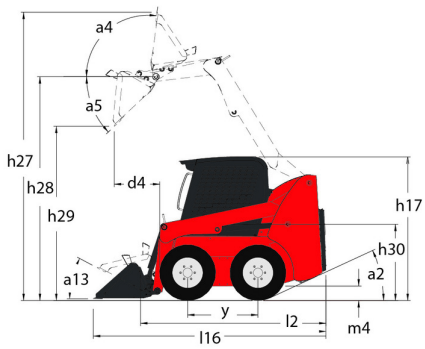

Equipment

—	
Integral Access Plate (removable)	Standard
Lifting function	
All-Tach® Attachment Mounting System	Standard
Auxiliary Hydraulics	Standard
Lighting	
Work Lights - Front and Rear	Standard
Motorization/Power	
Engine Block Heater	Standard
Operator station	
Cab Enclosure	Optional
Foot and Hand Throttles 2	Standard
Gehl T-Bar Controls	Standard
Hand/Foot Controls	Standard
Heating	Optional
High-Back Adjustable Seat	Standard
Horn	Optional
ROPS/FOPS Level II Overhead Guard	Standard
Sound Reduction Material	Standard
Suspension Seat - Mechanical	Optional
Other options	
Hydrostatic Drive - Servo	Standard
Selectable Self-Leveling Hydraulic Lift Action 4	Optional
Secondary functions	
Counterweight	Optional
Full Instrumentation	Standard
Security	
Anti-Vandalism Protection	Standard
Back-Up Alarm	Optional
Brake Control (Auto / Manual)	Standard
Hydraloc™ Safety System	Standard
Lift Arm Support Device	Standard
Operator Restraint Bar	Standard

Head Office
B.P. 249 - 430 rue de l'Aubinière
44150 Ancenis Cedex - France
Tel: +33 (0)2 40 09 10 11 - Fax: +33 (0)2 40 09 10 97
www.manitou.com

This publication provides a description of the configuration versions and options for Manitou products, which may differ for equipment. The equipment presented in this brochure may be part of a series, as an option, or it may not be available, depending on the versions. Manitou reserves the right, at any time and without notice, to amend the specifications described and represented. The specifications provided do not bind the manufacturer. For more details, please contact your Manitou agent. This is not a contractually binding document. The presentation of the products is not contractually binding. List of specifications non-exhaustive. The logos as well as the visual identity of the company are owned by Manitou and cannot be used without authorisation. All rights reserved. The photos and diagrams contained in this brochure are only provided for consultation and information purposes.
MANITOU BF SA - Limited company with board of directors - Share capital: 39,668,399 euros - 857 802 508 RCS Nantes